# PRELIMINARY / FINAL SITE PLAN

# THE LEARNING EXPERIENCE

## 100 UNION AVENUE, BOROUGH OF WATCHUNG, COUNTY OF SOMERSET, NEW JERSEY
## BLOCK 78.01, LOT 1, TAX SHEET # 22

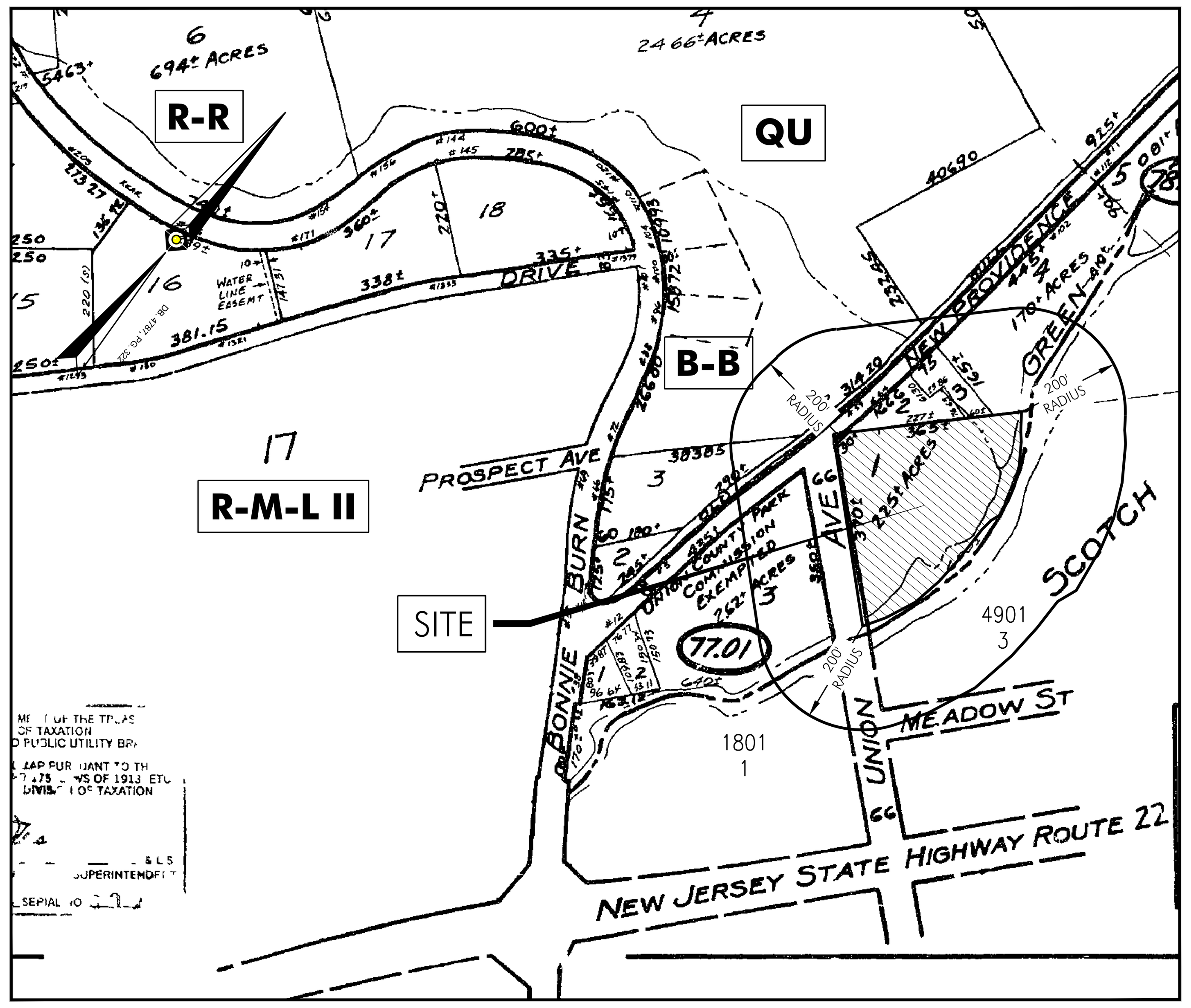


## ZONING & TAX MAP
**SCALE : 1"=250'**

## AERIAL MAP
**SCALE : 1"=250'**

**ZONING SCHEDULE**
**BLOCK 78.01 LOT 1**
**ZONE B-B (PROFESSIONAL AND OFFICE)**

| ***Bulk Regulation*** | Units | ***Requirement*** | ***Existing*** | | ***Proposed*** | |
|---|---|---|---|---|---|---|
| **Principal Building** | | | | | | |
| Principal Permitted Uses | | See Note 2 | Vacant Lot | C | Child-Care Center | C |
| Lot Area (Min.) | Sq.Ft. | 30,000 | 96,359.00 | C | 96,359.00 | C |
| Lot Frontage (Min.) Union Avenue | Feet | 150 | 393.53 | C | 393.53 | C |
| Lot Frontage (Min.) New Providence Road | Feet | 150 | 40.28 | ENC | **40.28** | **V** |
| Lot Width (Min.) | Feet | 150 | 367.50 | | 367.50 | C |
| Lot Depth (Min.) | Feet | 100 | NA | | 234.02 | C |
| Front Yard (Min.) Union Avenue | Feet | 25 | NA | | 25.00 | C |
| Front Yard (Min.) New Providence Road | Feet | 25 | NA | | 25.00 | C |
| Side Yard - One (Min.) | Feet | 5 | NA | | 30.97 | C |
| Side Yard - Both (Min.) | Feet | 20 | NA | | NA | |
| Rear Yard (Min.) | Feet | 25 | NA | | 188.87 | C |
| Building Height (Max.) | Feet/Stories | 35' / 2.5 Stories | NA | | 2 Stories / 34.67 | C |
| Building Coverage (Max.) | % | 30 | NA | | 5.59 | C |
| Impervious Coverage (Max.) | % | 70 | NA | | 21.14 | C |
| Net Habitable Floor Area | Sq.Ft. | 1,000 | NA | | 10,782 | C |
| Distance - Parking Setback in Front Yard (Min.) | Feet | 20 | NA | | **5.00** | **V** |
| Distance - Lot Line to Sign (Min.) | Feet | 10 | NA | | 10.00 | C |
| Sign - Height (Max.) | Feet | 18 | NA | | 4.00 | C |
| Curbed Planting Island | Feet | 9 | NA | | **4.77** | **W** |
| **Accessory Building** | | | | | | |
| Distance to Side Line (Min.) | Feet | 5 | NA | | NA | |
| Distance to Rear Line (Min.) | Feet | 10 | NA | | NA | |
| Distance to Other Building (Min.) | Feet | 20 | NA | | NA | |
| Height within Building Envelop (Max.) | Feet/Stories | 25' / 2 Stories | NA | | NA | |
| Height outside Building Envelop (Max.) | Feet/Stories | 15' / 1 Story | NA | | NA | |

***Abbreviations:***

- NA — Not Applicable
- C — Conforms
- ENC — Existing Non Conformance
- NR — No Requirement
- V — Variance Required
- W — Waiver Required

***Notes:***

1. Codes are based on the Borough of Watchung, Ordinance Section: 28-407.D : Area and Yard Requirements for the B-B District.
2. Based on the Borough of Watchung, Ordinance Section : 28-400.S.2 : child care centers are permitted.

GENERAL NOTES:

1. APPLICANT PROPOSES TO CONSTRUCT A 2-STORY CHILD DAYCARE FACILITY. THE FACILITY WILL HAVE A MAXIMUM CHILD OCCUPANCY OF 154 AND A MAXIMUM STAFF OCCUPANCY OF 22 PERSONS FOR A TOTAL MAXIMUM OCCUPANCY OF 176 PERSONS.
2. THE AREA OF THE PARCEL IS 96,359 S.F. OR 2.21 ACRES. ELEVATIONS ARE BASED ON NAVD88 DATUM.
3. PROPERTY IS PARTIALLY LOCATED IN FLOOD HAZARD ZONE 'AE'.
4. ALL UTILITIES TO SERVICE THE BUILDING ARE TO BE INSTALLED UNDERGROUND.
5. THE LIMIT OF DISTURBANCE IS 31,396 S.F. OR 0.721 ACRES; THEREFORE, SOMERSET-UNION SOIL CONSERVATION DISTRICT APPROVAL IS REQUIRED.
6. A PORTION OF THIS SITE LIES WITHIN THE 100-YEAR FLOOD HAZARD AREA OF THE GREEN BROOK. CONSTRUCTION ACTIVITIES WITHIN FLOOD HAZARD AREAS ARE REGULATED BY THE NEW JERSEY DEPARTMENT OF ENVIRONMENTAL PROTECTION (NJDEP). CERTAIN ACTIVITIES MAY BE PROHIBITED OR WILL REQUIRE A PERMIT FROM THE NJDEP.
7. THE FLOOD HAZARD LINE INDICATED ON THE PLANS ASSOCIATED WITH THIS APPLICATION IS BASED ON NJDEP DELINEATION METHOD 1 AS DESCRIBED UNDER N.J.A.C. 7:13-3.3 WHICH ALLOWS USAGE OF FEDERAL EMERGENCY MANAGEMENT AGENCY (FEMA) FLOOD INSURANCE RATE MAPS (FIRM) TO ESTABLISH THE LIMITS OF THE 100-YEAR FLOOD HAZARD AREA. FEMA FIRM MAP FOR SOMERSET COUNTY, NJ, BOROUGH OF WATCHUNG, PANEL 92 OF 301, MAP NUMBER 34035C0092E WITH AN EFFECTIVE DATE OF SEPTEMBER 28, 2007 WAS USED.
8. THE HOURS OF OPERATION FOR THE PROPOSED DAYCARE FACILITY WILL BE FROM 6:30 A.M. TO 6:30 P.M., MONDAY THROUGH FRIDAY.

**PARKING REQUIREMENTS:**
Code based on Township of Watchung §134-31.2 Accessory Parking Requirements.

| DAY CARE FACILITIES AND | PARKING REQUIREMENT | MIN. PARKING SPACES |
|---|---|---|
| **Child Day Care - 10,782 S.F.** | Not specified, to be determined by the Board on the basis of # persons to be employed and anticipated use. | **Proposed 32** |
| | **Total Spaces Required** | **0** |
| | **Total Spaces Provided** | **31 (C)** |

**Maximum Child Occupancy: 154**
**Maximum Staff Occupancy: 22**
**ADA Parking Spaces Required = 2, of which, 1 is required to be ADA Van accessible**
Per N.J.A.C. 5:23-7.10(c):
**ADA Parking Spaces Provided = 2, of which, 2 are ADA Van accessible**

REGULATORY APPROVALS REQUIRED:

1. BOROUGH OF WATCHUNG PLANNING BOARD
2. SOMERSET COUNTY PLANNING BOARD
3. SOMERSET-UNION SOIL CONSERVATION DISTRICT
4. NJDEP FLOOD HAZARD AREA PERMIT
5. NJDEP WETLANDS LETTER OF INTERPRETATION

## PROJECT CONTACTS

OWNER/ APPLICANT:
100 UNION HOLDINGS, LLC
540 NORTH AVENUE
UNION, NJ 07083

ATTORNEY:
STEPHEN F. HEHL, ESQ.
370 CHESTNUT STREET
UNION, NJ 07083

ENGINEER:
GERARD P. GESARIO, PE
JARMEL KIZEL ARCHITECTS AND ENGINEERS, INC.
42 OKNER PARKWAY
LIVINGSTON, NJ 07039

ARCHITECT:
MATTHEW B. JARMEL, AIA
JARMEL KIZEL ARCHITECTS AND ENGINEERS, INC.
42 OKNER PARKWAY
LIVINGSTON, NJ 07039

PRELIMINARY/FINAL SITE PLAN OF:
"THE LEARNING EXPERIENCE "

BLOCK 78.01, LOT 1

I HAVE REVIEWED THIS SITE PLAN AND CERTIFY THAT IT MEETS ALL CODES AND ORDINANCES UNDER MY JURISDICTION.

........................................................
(MUNICIPAL ENGINEER) (DATE)

APPROVED BY THE PLANNING BOARD

........................................................
(CHAIRMAN) (DATE)

........................................................
(SECRETARY) (DATE)

## DRAWING INDEX


| SHEET NO. | DRAWING NO. | DRAWING NAME | DATE | LAST REV. DATE |
|---|---|---|---|---|
| 1 | C-001 | COVER SHEET | 05-30-19 | 8-31-20 |
| 1A | C-002 | 200' OWNERS LIST | 07-03-19 | 12-02-19 |
| 2 | C-100 | EXISTING CONDITIONS/ENVIRONMENTAL CONSTRAINTS PLAN | 05-30-19 | 8-31-20 |
| 3 | C-110 | STEEP SLOPE ANALYSIS | 05-30-19 | 12-02-19 |
| 4 | C-200 | DEMOLITION PLAN | 05-30-19 | 8-31-20 |
| 5 | C-300 | SITE PLAN | 05-30-19 | 8-31-20 |
| 6 | C-400 | GRADING AND DRAINAGE PLAN | 05-30-19 | 8-31-20 |
| 6A | C-410 | NJDEP MITIGATION PLAN | | 8-31-20 |
| 7 | C-500 | UTILITY PLAN | 05-30-19 | 8-31-20 |
| 8 | C-550 | SANITARY SEWER PLAN & SANITARY SEWER PROFILE | 05-30-19 | 8-31-20 |
| 9 | C-600 | LANDSCAPE PLAN | 05-30-19 | 8-31-20 |
| 10 | C-700 | LIGHTING PLAN AND DETAILS | 05-30-19 | 8-31-20 |
| 11 | C-800 | SOIL EROSION AND SEDIMENT CONTROL PLAN | 05-30-19 | 8-31-20 |
| 12 | C-801 | SOIL EROSION AND SEDIMENT CONTROL DETAILS | 05-30-19 | 12-02-19 |
| 13 | C-900 | DETAIL SHEET | 05-30-19 | 12-02-19 |
| 14 | C-901 | DETAIL SHEET | 05-30-19 | 12-02-19 |
| 15 | C-902 | DETAIL SHEET | 05-30-19 | 12-02-19 |
| 16 | C-903 | DETAIL SHEET | 05-30-19 | 12-02-19 |
| 17 | C-904 | DETAIL SHEET | 05-30-19 | 12-02-19 |



Jarmel Kizel
ARCHITECTS AND ENGINEERS INC.
42 OKNER PARKWAY
LIVINGSTON, NEW JERSEY 07039
TEL: 973-994-9669
FAX: 973-994-4069
www.jarmelkizel.com


Architecture
Engineering
Interior Design
Implementation Services

ISSUE

| NO. | DATE | DESCRIPTION | INT. |
|---|---|---|---|
| 1. | 6.13.19 | COMPLETENESS REVIEW | GPG |
| 2. | 10.31.19 | PLANNING BOARD SUBMISSION | GPG |
| 3. | 12.02.19 | P.B. RE-SUBMISSION | GPG |
| 4. | 3.04.20 | P.B. RE-SUBMISSION | GPG |
| 5. | 9.04.20 | FOR 9.15.20 P.B. HEARING | GPG |

REVISION

| NO. | DATE | DESCRIPTION | INT. |
|---|---|---|---|
| 1. | 10.31.19 | PER NJDEP & TECH. REVIEW #1 | GPG |
| 2. | 12.02.19 | REVISED BUILDING LOCATION | APP |
| 3. | 8.31.20 | REV WETLAND LINE & GRADING | GPG |


**PRINCIPALS**
**MATTHEW B. JARMEL, AIA, MBA** — NJ LIC AI0-12787; AZ LIC 48159; MN LIC 46404; CO LIC ARC-401483; NC LIC 10120; CT LIC ARI.0011415; NH LIC 3501; DC LIC ARC101849; NY LIC 024673; DE LIC S5-0007256; OH LIC A-99-12444; FL LIC AR98965; PA LIC RA-014851-B; GA LIC RA011484; RI LIC ARC.0004765; IA LIC 05577; SC LIC AR.9163; IL LIC 001.020069; TN LIC 103850; MA LIC AR10286; TX LIC 20992; MD LIC 12662; VA LIC 0401 014089; MI LIC 1301052189; VT LIC 2453
**IRWIN H. KIZEL, AIA, PP** — NJ LIC 21AI00794700; CT LIC 08522; NJ PP LIC 33LI00243100
**RICHARD A. JARMEL, PE** — NJ LIC 37491; CT LIC PEN0027735; MN LIC 47482; FL LIC 83149; NY LIC 073898-1; MI LIC 6201052339; PA LIC PE070600; DE LIC 18754; MA LIC 50445; VT LIC 88498; TX LIC 123822
**ASSOCIATES**
**RONALD A. BROKENSHIRE, PE** — CT LIC PEN.0032811; NJ LIC GE45511; PA LIC PE085817
**DAVID L. LESESNE, RA** — CT LIC ARI-0011748; MA LIC 31425; NJ LIC AI 13231; NY LIC 024719; PA LIC RA-405081
**MICHAEL J. VORLAND, RA** — NY LIC 036993
**GERARD P. GESARIO, PE** — NJ LIC GE038255
**FREDERICK KINCAID, RA** — NJ LIC 21A1018294
**JEROME LESLIE EBEN, FAIA, PP** — PA LIC 016502-B; VA LIC 0401 012073; NJ LIC AI 8883; NY LIC 019151; IL LIC 001 017694
**CHERYL SCHWEIKER, AIA** — NJ LIC 21AI02069000; PA LIC RA407927
NJ State Board Of Architects Authorization No. 161
NJ State Board Of Engineers & Land Surveyors Authorization No. 24GA28053000


Project: **THE LEARNING EXPERIENCE**
**PRELIMINARY AND FINAL SITE PLAN**
**100 UNION AVENUE**
**BLOCK 78.01, LOT 1, TAX SHEET # 22**
**BOROUGH OF WATCHUNG**
**COUNTY OF SOMERSET, STATE OF NEW JERSEY**

| | |
|---|---|
| Project No: **TLENJ-S-18-295** | Scale: **AS NOTED** |
| Drawn By: **A.P.P.** | Approved By: **G.P.G.** |

Drawing Name: **COVER SHEET**

Drawing Number: **C-001**

Sheet No: **1** of: **17**

Initial Date: **MAY 30, 2019**

**GERARD P. GESARIO**
**PROFESSIONAL ENGINEER**
**N.J. LIC. #GE038255**


S:\PROJECTS\TLENJ-S-18-295 TLE WATCHUNG UNION AVENUE\CAD\18-295 C-001 COVER.DWG GGESARIO PLOTTED: 09/02/2020

# 200' OWNERS LIST
# WATCHUNG, NJ

**Certified Property Owner's List**
Borough of Watchung, 15 Mountain Boulevard, Watchung, NJ 07069

The following property owners shall be notified at least 10 (ten) days prior to the date set for hearing. The applicant shall clearly indicate the type of service, i.e. P.S. (Personal Service) or R.M.S. (Registered Mail Service) used to notify each owner.

Application: BA or PB:______________________ Date: November 5, 2019

Block 7801 Lots 1 Address: 100 Union Avenue, Watchung, NJ

To comply with P.L. 1991, Chapter 245, the following is a presumed list of ALL Public Utilities serving this Municipality. ***Each must be notified***

NJ American Water Company
167 JFK Parkway
Short Hills, NJ 07078

Comcast – Region North
800 Rahway Avenue
Union, NJ 07083

Borough Clerk
15 Mountain Blvd.
Watchung, NJ 07069

Texas Eastern Transmission Corp
501 Coolidge
South Plainfield, NJ 07080

Jersey Central Power & Light Co
300 Madison Avenue
Morristown, NJ 07962-1911

Public Service Electric & Gas Company
4000 Hadley Road, M/C 430
South Plainfield, NJ 07080

Elizabethtown Gas Company
520 Green Lane
Union, NJ 07083

Verizon New Jersey Inc.
657 Florida Grove Road
Hopelawn, NJ 08861

**THERE MAY BE OTHER PUBLIC UTILIITES ENTITLED TO NOTICE UNDER THIS STATUTE.**

**NOTE:**

If County Road - NOTIFY:
Somerset County Planning Board
PO Box 3000
Somerville, NJ 08876

If State Road - NOTIFY:
State of NJ Dept of Transportation
CN-600
Trenton, NJ 08625

If an adjacent Municipality and/or County is within 200' of the subject property that Municipality and/or County and property owners located therein may be entitled to notice.

Adjacent Municipality/County: Scotch Plains Township / Union County

I certify that the attached is an accurate and complete list of property owners and addresses as prepared from the most recent tax lists, the owners must be given notice pursuant to NJSA 40:55D - 12.

Date: 11/03/2019 Tax Assessor: [signature]

I certify that no taxes, or assessments for local improvements, are due or delinquent on the subject property.

Date:__________________ Tax Clerk:______________________________

| PROPERTY ID | PROPERTY LOCATION | CLASS | OWNERS NAME & ADDRESS |
|---|---|---|---|
| 7601<br>2 | 48 BONNIE BURN ROAD | 15C | STATE OF N.J./DEPT.OF TRNSPT.<br>1035 PRKWAY AVE./POBX 616<br>TRENTON, NJ 08625 |
| 7601<br>3.01 | BONNIE BURN ROAD | 1 | WELDON MATERIALS INC<br>141 CENTRAL AVENUE<br>WESTFIELD NJ 07090 |
| 7601<br>4 | NEW PROVIDENCE ROAD | 4B | WELDON MATERIALS INC<br>141 CENTRAL AVENUE<br>WESTFIELD NJ 07090 |
| 7601<br>5 | NEW PROVIDENCE ROAD | 1 | WELDON MATERIALS INC<br>141 CENTRAL AVENUE<br>WESTFIELD NJ 07090 |
| 7701<br>3 | NEW PROVIDENCE ROAD | 15C | UNION COUNTY PARK COMMISSION<br>P O BOX 275<br>ELIZABETH NJ 07207 |
| 7801<br>4 | NEW PROVIDENCE ROAD | 1 | WELDON MATERIALS INC<br>141 CENTRAL AVENUE<br>WESTFIELD NJ 07090 |
| 7801<br>5 | NEW PROVIDENCE ROAD | 1 | WELDON MATERIALS INC<br>141 CENTRAL AVENUE<br>WESTFIELD NJ 07090 |

# 200' OWNERS LIST
# SCOTCH PLAINS, NJ

TOWNSHIP OF SCOTCH PLAINS, NEW JERSEY
430 PARK AVENUE, SCOTCH PLAINS, NJ 07076
LAND USE OFFICE
(908) 322-6700, ext. 307

November 5, 2019

Stephen F. Hehl, Esq.
Hehl Offices of
Javerbaum Wurgaft
370 Chestnut Street
Union, NJ 07083

*Via e-mail and regular mail*

**Re: 200 ft. Radius List**
**100 Union Avenue**
**Block 78.01, Lot 1**
**Watchung, NJ**

Dear Mr. Hehl:

Enclosed please find the certified list of property owners within 200 ft. of the above-referenced properties. The Utility Company address list is also attached.

If you need any additional information, please do not hesitate to contact me.

Very truly yours,

[signature]
Shannon Rapant
Land Use Secretary

Enc.

200 FOOT RADIUS LIST

I CERTIFY THAT THE FOLLOWING IS AN ACCURATE AND COMPLETE LIST OF PROPERTY OWNERS AND ADDRESSES. THIS LIST HAS BEEN PREPARED FROM THE MOST RECENT TAX ROLLS

PREPARED BY: Michael Ross

CERTIFIED BY: [signature]
Michael A. Ross, Tax Assessor

DATE: 11/5/19

REQUESTED BY: Hehl

BLOCK 7801 LOT 1 WATCHUNG

PROPOSED DEVELOPMENT:

OWNER & ADDRESS REPORT

SCOTCH PLAINS — 11/05/19 Page 1 of 6

| BLOCK | LOT | QUAL | CLA | PROPERTY OWNER | PROPERTY LOCATION | Add'l Lots |
|---|---|---|---|---|---|---|
| 1801 | 1 | | 15C | UNION COUNTY PARK COMM<br>ACME & CANTON STS<br>ELIZABETH N J 07202 | 1909 ROUTE 22 | |
| 1801 | 2 | | 4A | SCHAFER, STEVEN<br>1919 RT. 22, W.<br>SCOTCH PLAINS, N.J. 07076 | 1919 ROUTE 22 | 1801,3 |
| 1801 | 4 | | 4A | RASCIONATO, ANTONIO & ANGELA<br>8 QUAIL RUN<br>WARREN, NJ 07060 | 1927 ROUTE 22 | |
| 1801 | 5.01 | | 4A | AR CORNER PLAZA REALTY<br>8 QUAIL RUN<br>WARREN, NJ 07059 | 1943 ROUTE 22 | |
| 4901 | 2 | | 1 | BRUNSWICK HOT MIX CORP<br>141 CENTRAL AVE<br>WESTFIELD, N J 07090 | REAR OF NEW PROVIDENCE RD | |
| 4901.01 | 3 | C0101 | 2 | BLANK, MARK & TRACEY<br>101 DONATO CIRCLE<br>SCOTCH PLAINS, NJ 07076 | 101 DONATO CIRCLE | |
| 4901.01 | 3 | C0102 | 2 | LAI, RONALD<br>102 DONATO CIR<br>SCOTCH PLAINS, NJ 07076 | 102 DONATO CIRCLE | |
| 4901.01 | 3 | C0103 | 2 | TSANG, KAWEI<br>103 DONATO CIRCLE<br>SCOTCH PLAINS, NJ 07076 | 103 DONATO CIRCLE | |
| 4901.01 | 3 | C0104 | 2 | BOSONAC, BRAD ROSS<br>104 DONATO CR<br>SCOTCH PLAINS, N.J. 07076 | 104 DONATO CIRCLE | |
| 4901.01 | 3 | C0105 | 2 | BULGER, BRIAN<br>105 DONATO CIRCLE<br>SCOTCH PLAINS, NJ 07076 | 105 DONATO CIRCLE | |
| 4901.01 | 3 | C0106 | 2 | PANDEY, NEHA & SINGH, PRATIK<br>106 DONATO CIRCLE<br>SCOTCH PLAINS, NJ 07076 | 106 DONATO CIRCLE | |
| 4901.01 | 3 | C0107 | 2 | SINHA, ARIJIT & ANKITA<br>107 DONATO CIRCLE UD12<br>SCOTCH PLAINS, NJ 07076 | 107 DONATO CIRCLE | |
| 4901.01 | 3 | C0108 | 2 | RINSHAWN RESERVE LLC<br>PO BOX 96<br>FANWOOD, NJ 07023 | 108 DONATO CIRCLE | |
| 4901.01 | 3 | C0109 | 2 | KORDE, SHWETAMBARI & NIKHILESH<br>109 DONATO CIRCLE<br>SCOTCH PLAINS, NJ 07076 | 109 DONATO CIRCLE | |
| 4901.01 | 3 | C0110 | 2 | CARDARELLI, LAWRENCE<br>110 DONATO CIRCLE<br>SCOTCH PLAINS, N.J. 07076 | 110 DONATO CIRCLE | |
| 4901.01 | 3 | C0111 | 2 | CHEN, WEIYING<br>111 DONATO CIRCLE<br>SCOTCH PLAINS, NJ 07076 | 111 DONATO CIRCLE | |
| 4901.01 | 3 | C0112 | 2 | GALINDO PARRA, NANCY<br>112 DONATO CIRCLE<br>SCOTCH PLAINS, NJ 07076 | 112 DONATO CIRCLE | |
| 4901.01 | 3 | C0113 | 2 | MALLIK, ALOK<br>113 DONATO CIRCLE<br>SCOTCH PLAINS, NJ 07076 | 113 DONATO CIRCLE | |
| 4901.01 | 3 | C0114 | 2 | GLANZBERG, SUSAN<br>114 DONATO CIRCLE<br>SCOTCH PLAINS, NJ 07076 | 114 DONATO CIRCLE | |

OWNER & ADDRESS REPORT

SCOTCH PLAINS — 11/05/19 Page 2 of 6

| BLOCK | LOT | QUAL | CLA | PROPERTY OWNER | PROPERTY LOCATION | Add'l Lots |
|---|---|---|---|---|---|---|
| 4901.01 | 3 | C0115 | 2 | REEDY, JAMES B.<br>115 DONATO CR<br>SCOTCH PLAINS, N.J. 07076 | 115 DONATO CIRCLE | |
| 4901.01 | 3 | C0116 | 2 | HSU, CHERYL<br>2058 WESTFIELD AVE<br>SCOTCH PLAINS, N.J. 07076 | 116 DONATO CIRCLE | |
| 4901.01 | 3 | C0117 | 2 | GIANETTI, CRAIG & JENNIFER<br>117 DONATO CIR<br>SCOTCH PLAINS, NJ 07076 | 117 DONATO CIRCLE | |
| 4901.01 | 3 | C0118 | 2 | GORELIK, ALEX<br>118 DONATO CIRCLE<br>SCOTCH PLAINS, NJ 07076 | 118 DONATO CIRCLE | |
| 4901.01 | 3 | C0119 | 2 | ANG, SALYIN KARYN<br>119 DONATO CIRCLE<br>SCOTCH PLAINS, NJ 07076 | 119 DONATO CIRCLE | |
| 4901.01 | 3 | C0120 | 2 | SIDHOM, MINA & DIANNA<br>120 DONATO CIRCLE<br>SCOTCH PLAINS, NJ 07076 | 120 DONATO CIRCLE | |
| 4901.01 | 3 | C0121 | 2 | NGUYEN, HUNG & DUNG T<br>1618 N MARCONI ROAD<br>WALL TOWNSHIP, NJ 07719 | 121 DONATO CIRCLE | |
| 4901.01 | 3 | C0122 | 2 | REGI,MATTHEW & BINU THOMAS<br>27 MATTHEWS FARM RD<br>BELLE MEAD, NJ 08502 | 122 DONATO CIRCLE | |
| 4901.02 | 3 | C0201 | 2 | FRAZIER,FRED/AGBOLOSO,AGNES<br>201 DONATO CIRCLE<br>SCOTCH PLAINS, NJ 07076 | 201 DONATO CIRCLE | |
| 4901.02 | 3 | C0202 | 2 | LONON, TRACEY<br>202 DONATO CIRCLE<br>SCOTCH PLAINS, NJ 07076 | 202 DONATO CIRCLE | |
| 4901.02 | 3 | C0204 | 2 | EVELY,ETHEL<br>204 DONATO CIRCLE<br>SCOTCH PLAINS, NJ 07076 | 204 DONATO CIRCLE | |
| 4901.02 | 3 | C0205 | 2 | FREDERICK, TERRY<br>205 DONATO CIR<br>SCOTCH PLAINS, NJ 07076 | 205 DONATO CIRCLE | |
| 4901.02 | 3 | C0206 | 2 | WEEMS, MELVINA<br>206 DONATO CIR<br>SCOTCH PLAINS, NJ 07076 | 206 DONATO CIRCLE | |
| 4901.02 | 3 | C0207 | 2 | ODUSOLA,OLATUNDE I<br>207 DONATO CIRCLE<br>SCOTCH PLAINS, NJ 07076 | 207 DONATO CIRCLE | |
| 4901.02 | 3 | C0208 | 2 | LYCHATYN, JOHN<br>208 DONATO CR<br>SCOTCH PLAINS, N.J. 07076 | 208 DONATO CIRCLE | |
| 4901.02 | 3 | C0210 | 2 | JONES, RONDA<br>210 DONATO CIRCLE<br>SCOTCH PLAINS, NJ 07076 | 210 DONATO CIRCLE | |
| 4901.03 | 3 | C0301 | 2 | OSER, HIRAM & PAMELA<br>301 DONATO CIR<br>SCOTCH PLAINS, NJ 07076 | 301 DONATO CIRCLE | |
| 4901.03 | 3 | C0302 | 2 | CLARK, RENEE<br>302 DONATO CIRCLE<br>SCOTCH PLAINS, N.J. 07076 | 302 DONATO CIRCLE | |
| 4901.03 | 3 | C0304 | 2 | SCHNEIDER, LINDY<br>304 DONATO CIRCLE<br>SCOTCH PLAINS, N.J. 07076 | 304 DONATO CIRCLE | |

OWNER & ADDRESS REPORT

SCOTCH PLAINS — 11/05/19 Page 3 of 6

| BLOCK | LOT | QUAL | CLA | PROPERTY OWNER | PROPERTY LOCATION | Add'l Lots |
|---|---|---|---|---|---|---|
| 4901.03 | 3 | C0305 | 2 | WEEMS, GLORIA<br>305 DONATO CIRCLE<br>SCOTCH PLAINS, N.J. 07076 | 305 DONATO CIRCLE | |
| 4901.03 | 3 | C0306 | 2 | WUSSLER, VALERIE K<br>306 DONATO CIRCLE<br>SCOTCH PLAINS, NJ 07076 | 306 DONATO CIRCLE | |
| 4901.03 | 3 | C0307 | 2 | MILLER, DEMETRIUS<br>307 DONATO CIRCLE<br>SCOTCH PLAINS, N.J. 07076 | 307 DONATO CIRCLE | |
| 4901.03 | 3 | C0308 | 2 | GUADAGNINI, KAREN<br>308 DONATO CIRCLE<br>SCOTCH PLAINS, N.J. 07076 | 308 DONATO CIRCLE | |
| 4901.03 | 3 | C0310 | 2 | GARLAND, SAKINAH<br>310 DONATO CR<br>SCOTCH PLAINS, N.J. 07076 | 310 DONATO CIRCLE | |
| 4901.04 | 3 | C0401 | 2 | FALKOWITZ, JOHANNA M<br>401 DONATO CIRCLE<br>SCOTCH PLAINS, NJ 07076 | 401 DONATO CIRCLE | |
| 4901.04 | 3 | C0402 | 2 | SERIO, GEORGE F JR & MARVEL,BRITNEY<br>402 DONATO CIRCLE<br>SCOTCH PLAINS, NJ 07076 | 402 DONATO CIRCLE | |
| 4901.04 | 3 | C0403 | 2 | WHITAKER, THOMAS J<br>403 DONATO CIRCLE<br>SCOTCH PLAINS, NJ 07076 | 403 DONATO CIRCLE | |
| 4901.04 | 3 | C0404 | 2 | YELLAYI, S.; KASIBHATLA, U.<br>404 DONATO CIRCLE<br>SCOTCH PLAINS, N.J. 07076 | 404 DONATO CIRCLE | |
| 4901.04 | 3 | C0405 | 2 | KODURU, L., GURRELA, SWETHA<br>405 DONATO CIRCLE<br>SCOTCH PLAINS, NJ 07076 | 405 DONATO CIRCLE | |
| 4901.04 | 3 | C0406 | 2 | JIANG, HAITAO<br>406 DONATO CIRCLE<br>SCOTCH PLAINS, NJ 07076 | 406 DONATO CIRCLE | |
| 4901.04 | 3 | C0407 | 2 | YU,XINMEI<br>407 DONATO CIRCLE<br>SCOTCH PLAINS, NJ 07076 | 407 DONATO CIRCLE | |
| 4901.04 | 3 | C0408 | 2 | HENWOOD,GORDON C<br>408 DONATO CIRCLE<br>SCOTCH PLAINS, NJ 07076 | 408 DONATO CIRCLE | |
| 4901.04 | 3 | C0409 | 2 | BOEHM, ROSEMARY & GARTH<br>409 DONATO CI<br>SCOTCH PLAINS, NJ 07076 | 409 DONATO CIRCLE | |
| 4901.04 | 3 | C0410 | 2 | RIEDELL, LISA V<br>410 DONATO CIRCLE<br>SCOTCH PLAINS, NJ 07076 | 410 DONATO CIRCLE | |
| 4901.04 | 3 | C0411 | 2 | MOUNTS, JOY ELLEN<br>411 DONATO CIR<br>SCOTCH PLAINS, NJ 07076 | 411 DONATO CIRCLE | |
| 4901.04 | 3 | C0412 | 2 | CONNER, KEVIN & SINICROPI,N<br>45 BRISTOL COURT<br>BERKELEY HEIGHTS, NJ 07922 | 412 DONATO CIRCLE | |
| 4901.05 | 3 | C0501 | 2 | LETTIERI, PATRICIA D<br>501 DONATO CIRCLE<br>SCOTCH PLAINS, NJ 07076 | 501 DONATO CIRCLE | |
| 4901.05 | 3 | C0502 | 2 | NERO, HARVETTA<br>502 DONATO CIRCLE<br>SCOTCH PLAINS, NJ 07076 | 502 DONATO CIRCLE | |

OWNER & ADDRESS REPORT

SCOTCH PLAINS — 11/05/19 Page 4 of 6

| BLOCK | LOT | QUAL | CLA | PROPERTY OWNER | PROPERTY LOCATION | Add'l Lots |
|---|---|---|---|---|---|---|
| 4901.05 | 3 | C0503 | 2 | LO BRACE, JOSEPH R<br>503 DONATO CIRCLE<br>SCOTCH PLAINS, NJ 07076 | 503 DONATO CIRCLE | |
| 4901.05 | 3 | C0504 | 2 | BASRAI, HUZAIFAH & FATEMA<br>1 PARK PLACE<br>MILLTOWN, NJ 08850 | 504 DONATO CIRCLE | |
| 4901.05 | 3 | C0505 | 2 | PATEL,AAVISHKAR & TEJAL<br>505 DONATO CIRCLE<br>SCOTCH PLAINS, NJ 07076 | 505 DONATO CIRCLE | |
| 4901.05 | 3 | C0506 | 2 | AKINWUNMI, AKINOLA AKINTOYE<br>506 DONATO CIRCLE<br>SCOTCH PLAINS, NJ 07076 | 506 DONATO CIRCLE | |
| 4901.05 | 3 | C0507 | 2 | TONEY, JEFFREY<br>507 DONATO CIRCLE<br>SCOTCH PLAINS, NJ 07076 | 507 DONATO CIRCLE | |
| 4901.05 | 3 | C0508 | 2 | HADDAD, PATRICIA K<br>508 DONATO CIRCLE<br>SCOTCH PLAINS, NJ 07076 | 508 DONATO CIRCLE | |
| 4901.05 | 3 | C0509 | 2 | YUAN, FEI & SHUNG,K<br>509 DONATO CIRCLE<br>SCOTCH PLAINS, NJ 07076 | 509 DONATO CIRCLE | |
| 4901.05 | 3 | C0510 | 2 | TOLENTINO, MICHAEL & MANIBAY,ANGELA<br>510 DONATO CIRCLE<br>SCOTCH PLAINS, NJ 07076 | 510 DONATO CIRCLE | |
| 4901.05 | 3 | C0511 | 2 | FERRO, DEBRA<br>511 DONATO CIRCLE<br>SCOTCH PLAINS, NJ 07076 | 511 DONATO CIRCLE | |
| 4901.05 | 3 | C0512 | 2 | MASLYUK, BORIS & YELENA<br>512 DONATO CIRCLE<br>SCOTCH PLAINS, NJ 07076 | 512 DONATO CIRCLE | |
| 4901.05 | 3 | C0513 | 2 | TILYOU, ANN<br>513 DONATO CIRCLE<br>SCOTCH PLAINS, NJ 07076 | 513 DONATO CIRCLE | |
| 4901.05 | 3 | C0514 | 2 | ZIMMER, ZACHARY B<br>514 DONATO CIRCLE<br>SCOTCH PLAINS, NJ 07076 | 514 DONATO CIRCLE | |
| 4901.05 | 3 | C0515 | 2 | REILLY, ROBERT & CHARLENE<br>515 DONATO CIR<br>SCOTCH PLAINS, NJ 07076 | 515 DONATO CIRCLE | |
| 4901.05 | 3 | C0516 | 2 | GIORDANO, REBEKAH<br>228 KING COURT<br>MOUNTAINSIDE, NJ 07092 | 516 DONATO CIRCLE | |
| 4901.06 | 3 | C0601 | 2 | SUN, SHU JUAN<br>601 DONATO CIRCLE<br>SCOTCH PLAINS, NJ 07076 | 601 DONATO CIRCLE | |
| 4901.06 | 3 | C0602 | 2 | SIDDIQUI, MAHAMMAD<br>602 DONATO CR<br>SCOTCH PLAINS, N.J. 07076 | 602 DONATO CIRCLE | |
| 4901.06 | 3 | C0603 | 2 | SADHVANI, KISHAN H & ANAMIKA MANGLA<br>30 BLACK BIRCH RD<br>SCOTCH PLAINS, NJ 07076 | 603 DONATO CIRCLE | |
| 4901.06 | 3 | C0604 | 2 | YOH, JESSIE<br>604 DONATO CIRCLE<br>SCOTCH PLAINS, NJ 07076 | 604 DONATO CIRCLE | |
| 4901.06 | 3 | C0605 | 2 | BAETA, CHRISTINA<br>605 DONATO CIRCLE<br>SCOTCH PLAINS, NJ 07076 | 605 DONATO CIRCLE | |

OWNER & ADDRESS REPORT

SCOTCH PLAINS — 11/05/19 Page 5 of 6

| BLOCK | LOT | QUAL | CLA | PROPERTY OWNER | PROPERTY LOCATION | Add'l Lots |
|---|---|---|---|---|---|---|
| 4901.06 | 3 | C0606 | 2 | LARKINS, GAIL<br>606 DONATO CIRCLE<br>SCOTCH PLAINS, NJ 07076 | 606 DONATO CIRCLE | |
| 4901.06 | 3 | C0607 | 2 | CARUSO, RALPH<br>607 DONATO CIRCLE<br>SCOTCH PLAINS, NJ 07076 | 607 DONATO CIRCLE | |
| 4901.06 | 3 | C0608 | 2 | FOTI, PAOLO & IOLANDA<br>608 DONATO CIRCLE<br>SCOTCH PLAINS, NJ 07076 | 608 DONATO CIRCLE | |
| 4901.06 | 3 | C0609 | 2 | JONES,GEORGE P& ERICKA D<br>609 DONATO CIRCLE<br>SCOTCH PLAINS, NJ 07076 | 609 DONATO CIRCLE | |
| 4901.06 | 3 | C0610 | 2 | DI SARRO, GELSOMINIO & ELVIRA<br>610 DONATO CIRCLE<br>SCOTCH PLAINS, NJ 07076 | 610 DONATO CIRCLE | |
| 4901.06 | 3 | C0611 | 2 | LEUNG,DENNIS H/LIN,LAICHU<br>421 ST. JOSEPH AVE<br>HALF MOON BAY, CA 94019 | 611 DONATO CIRCLE | |
| 4901.06 | 3 | C0612 | 2 | AGASHIVALA, NEETU<br>612 DONATO CIRCLE<br>SCOTCH PLAINS, NJ 07076 | 612 DONATO CIRCLE | |
| 4901.07 | 3 | C0701 | 2 | CHAN, CHEUK K & RITA N<br>701 DONATO CIR<br>SCOTCH PLAINS, NJ 07076 | 701 DONATO CIRCLE | |
| 4901.07 | 3 | C0702 | 2 | CAVALIERE, NATALIA<br>347 MADISON HILL RD<br>CLARK, N.J. 07066 | 702 DONATO CIRCLE | |
| 4901.07 | 3 | C0703 | 2 | HO, DAVID C & CHEN, JIALI D<br>703 DONATO CIRCLE<br>SCOTCH PLAINS, NJ 07076 | 703 DONATO CIRCLE | |
| 4901.07 | 3 | C0704 | 2 | OBI, UCHENNA<br>704 DONATO CIRCLE<br>SCOTCH PLAINS, NJ 07076 | 704 DONATO CIRCLE | |
| 4901.07 | 3 | C0705 | 2 | FALCON, CARLA & SAIF, MINA<br>705 DONATO CIRCLE<br>SCOTCH PLAINS, NJ 07076 | 705 DONATO CIRCLE | |
| 4901.07 | 3 | C0706 | 2 | MUKHERJI, RAHUL D & PRASAD, NEHA<br>706 DONATO CIR UNIT C-2<br>SCOTCH PLAINS, NJ 07076 | 706 DONATO CIRCLE | |
| 4901.07 | 3 | C0707 | 2 | KOTHARI, PARIKSHIT<br>1400 HUDSON STREET #522<br>HOBOKEN, NJ 07030 | 707 DONATO CIRCLE | |
| 4901.07 | 3 | C0708 | 2 | PAN, YEN CHUN & SUNG, DEBBIE<br>708 DONATO CIRCLE<br>SCOTCH PLAINS, NJ 07076 | 708 DONATO CIRCLE | |
| 4901.07 | 3 | C0709 | 2 | KEMPISTY, THOMAS J<br>709 DONATO CIRCLE<br>SCOTCH PLAINS, NJ 07076 | 709 DONATO CIRCLE | |
| 4901.07 | 3 | C0710 | 2 | EITEL, JASON EDWARD & JOHANA<br>710 DONATO CIRCLE<br>SCOTCH PLAINS, NJ 07076 | 710 DONATO CIRCLE | |
| 4901.08 | 3 | C0801 | 2 | KORB, DAVID A<br>299 BALTUSROL WAY<br>SPRINGFIELD, NJ 07081 | 801 DONATO CIRCLE | |
| 4901.08 | 3 | C0802 | 2 | LEE,LIN SHU-FANG<br>802 DONATO CIRCLE<br>SCOTCH PLAINS, NJ 07076 | 802 DONATO CIRCLE | |

OWNER & ADDRESS REPORT

SCOTCH PLAINS — 11/05/19 Page 6 of 6

| BLOCK | LOT | QUAL | CLA | PROPERTY OWNER | PROPERTY LOCATION | Add'l Lots |
|---|---|---|---|---|---|---|
| 4901.08 | 3 | C0803 | 2 | VALENCIA, CLAUDIA<br>561 56TH STREET APT.303<br>WEST NEW YORK, NJ 07093 | 803 DONATO CIRCLE | |
| 4901.08 | 3 | C0804 | 2 | HETAL SHAH & PARTH PUROHIT<br>804 DONATO CIRCLE<br>SCOTCH PLAINS, NJ 07076 | 804 DONATO CIRCLE | |
| 4901.08 | 3 | C0805 | 2 | BHANGUNDE, PRATIK & SAVALGI,SNEHA<br>805 DONATO CIRCLE<br>SCOTCH PLAINS, NJ 07076 | 805 DONATO CIRCLE | |
| 4901.08 | 3 | C0806 | 2 | NIHALANI, KAMLESH<br>806 DONATO CIRCLE<br>SCOTCH PLAINS, NJ 07076 | 806 DONATO CIRCLE | |
| 4901.08 | 3 | C0807 | 2 | SHAH, NISHIT & DIMPLE<br>807 DONATO CIRCLE<br>SCOTCH PLAINS, NJ 07076 | 807 DONATO CIRCLE | |
| 4901.08 | 3 | C0808 | 2 | PANDEY, RAMENDRA & USHA<br>491 WINDING BROOK WAY<br>BRIDGEWATER, N.J. 08807 | 808 DONATO CIRCLE | |
| 4901.08 | 3 | C0809 | 2 | DILANNO, DOLORES<br>809 DONATO CIRCLE<br>SCOTCH PLAINS, NJ 07076 | 809 DONATO CIRCLE | |
| 4901.08 | 3 | C0810 | 2 | SOLOMON, KIA - JOHNSON, SHAWN<br>810 DONATO CIR<br>SCOTCH PLAINS, NJ 07076 | 810 DONATO CIRCLE | |
| 4901.08 | 3 | C0811 | 2 | PULEO, GABRIELLE E<br>811 DONATO CIRCLE<br>SCOTCH PLAINS, NJ 07076 | 811 DONATO CIRCLE | |
| 4901.08 | 3 | C0812 | 2 | PEREZ, FERNANDO F<br>812 DONATO CIRCLE<br>SCOTCH PLAINS, NJ 07076 | 812 DONATO CIRCLE | |

**UTILITY CONTACTS**:

Comcast Cablevision
800 Rahway Avenue
Union, NJ 07083-6691
908-851-8858
Contact: George Palyca, Construction Manager

NJ American Water Co.
1341 North Avenue
Plainfield, NJ 07062
Contact: Michael Bange

NUI Elizabethtown Gas
520 Green Lane
Union, NJ 07083-1975
201-618-9375
Contact: Mariana Maldonado

Public Service Electric & Gas
472 Weston Canal Road
Somerset, NJ 08873
732-764-3399, Ext. 4101
Contact: Robert Hughes

Verizon
6000 Hadley Road
South Plainfield, NJ 07080
732-418-5601
Contact: John R. Cross


Jarmel **Kizel**
ARCHITECTS AND ENGINEERS INC.
42 OKNER PARKWAY
LIVINGSTON, NEW JERSEY 07039
TEL: 973-994-9669
FAX: 973-994-4069
www.jarmelkizel.com

Architecture
Engineering
Interior Design
Implementation Services


ISSUE

| NO. | DATE | DESCRIPTION | INT. |
|---|---|---|---|
| 1. | 6.13.19 | COMPLETENESS REVIEW | GPG |
| 2. | 10.31.19 | PLANNING BOARD SUBMISSION | GPG |
| 3. | 12.02.19 | P.B. RE-SUBMISSION | GPG |
| 4. | 3.04.20 | P.B. RE-SUBMISSION | GPG |
| 5. | 9.04.20 | FOR 9.15.20 P.B. HEARING | GPG |

REVISION

| NO. | DATE | DESCRIPTION | INT. |
|---|---|---|---|
| 1. | 10.31.19 | PER NJDEP & TECH. REVIEW #1 | GPG |
| 2. | 12.02.19 | REVISED BUILDING LOCATION | APP |


**PRINCIPALS**
**MATTHEW B. JARMEL, AIA, MBA**
AZ LIC 48159; CO LIC ARC-401483; CT LIC ARI.0011415; DC LIC ARC101849; DE LIC S5-0007256; FL LIC AR98965; GA LIC RA011484; IA LIC 05577; IL LIC 001.020069; MA LIC AR10286; MD LIC 12662; MI LIC 1301052189
NJ LIC AI0-12787; MN LIC 46404; NC LIC 10120; NH LIC 3501; NY LIC 024673; OH LIC A-99-12444; PA LIC RA-014851-B; RI LIC ARC.0004765; SC LIC AR.9163; TN LIC 103850; TX LIC 20992; VA LIC 0401 014089; VT LIC 2453
**IRWIN H. KIZEL, AIA, PP**
CT LIC 08522; NJ LIC 21AI00794700; NJ PP LIC 33LI00243100
**RICHARD A. JARMEL, PE**
CT LIC PEN0027735; FL LIC 83149; MI LIC 6201052339; DE LIC 18754; VT LIC 88498
NJ LIC 37491; MN LIC 47482; NY LIC 073898-1; PA LIC PE070600; MA LIC 50445; TX LIC 123822
**ASSOCIATES**
**RONALD A. BROKENSHIRE, PE** — CT LIC PEN.0032811; NJ LIC GE45511; PA LIC PE085817
**DAVID L. LESESNE, RA** — CT LIC ARI-0011748; MA LIC 31425; NJ LIC AI 13231; NY LIC 024719; PA LIC RA-405081
**MICHAEL J. VORLAND, RA** — NY LIC 036993
**GERARD P. GESARIO, PE** — NJ LIC GE038255
**FREDERICK KINCAID, RA** — NJ LIC 21A1018294
**JEROME LESLIE EBEN, FAIA, PP** — PA LIC 016502-B; VA LIC 0401 012073; NJ LIC AI 8883; NY LIC 019151; IL LIC 001 017694
**CHERYL SCHWEIKER, AIA** — NJ LIC 21AI02069000; PA LIC RA407927
NJ State Board Of Architects Authorization No. 161
NJ State Board Of Engineers & Land Surveyors Authorization No. 24GA28053000


Project: **THE LEARNING EXPERIENCE**
**PRELIMINARY AND FINAL SITE PLAN**
**100 UNION AVENUE**
**BLOCK 78.01, LOT 1, TAX SHEET # 22**
**BOROUGH OF WATCHUNG**
**COUNTY OF SOMERSET, STATE OF NEW JERSEY**

| | |
|---|---|
| Project No: **TLENJ-S-18-295** | Scale: **AS NOTED** |
| Drawn By: **A.P.P.** | Approved By: **G.P.G.** |

Drawing Name: **200' OWNER LIST**

Drawing Number: **C-002**

Sheet No: **1A** of: **17**

Initial Date: **MAY 30, 2019**

[signature]
**GERARD P. GESARIO**
**PROFESSIONAL ENGINEER**
**N.J. LIC. #GE038255**


S:\PROJECTS\TLENJ-S-18-295 TLE WATCHUNG UNION AVENUE\CAD\18-295 C-002 OWNERS LIST.DWG GGESARIO PLOTTED: 09/02/2020

SURVEY REFERENCE:

1. BOUNDARY & TOPOGRAPHY INFORMATION IS BASED ON A SURVEY TITLED "BOUNDARY AND TOPOGRAPHIC SURVEY, TAX LOT 1 – BLOCK 78.01, BOROUGH OF WATCHUNG, COUNTY OF SOMERSET, NEW JERSEY" BY KSS, KENNON SURVEY SERVICES INC., OF WARREN NEW JERSEY, DATED 6/5/19.

WETLAND REFERENCE:

1. WETLAND DELINEATION PREPARED BY ENVIRONMENTAL LOGIC, MAY 14, 2019.

FLOOD HAZARD REFERENCE:

1. 100 YEAR FLOOD LINE BASED ON NJDEP METHOD I (DEPARTMENT DELINEATION METHOD) AS DESCRIBED IN N.J.A.C. 7:13-3.3. PER FEMA FLOOD INSURANCE STUDY, VOLUME 1 OF 5, SOMERSET COUNTY, N.J., FLOOD PROFILE SHEETS 49P AND 50P DATED REVISED NOVEMBER 4, 2016.

2. FROM GREENBROOK FLOOD PROFILES SECTION 64500 TO 65100, THE FLOOD HAZARD ELEVATION RANGES FROM 159.5 TO 162.6 (NAVD 88).

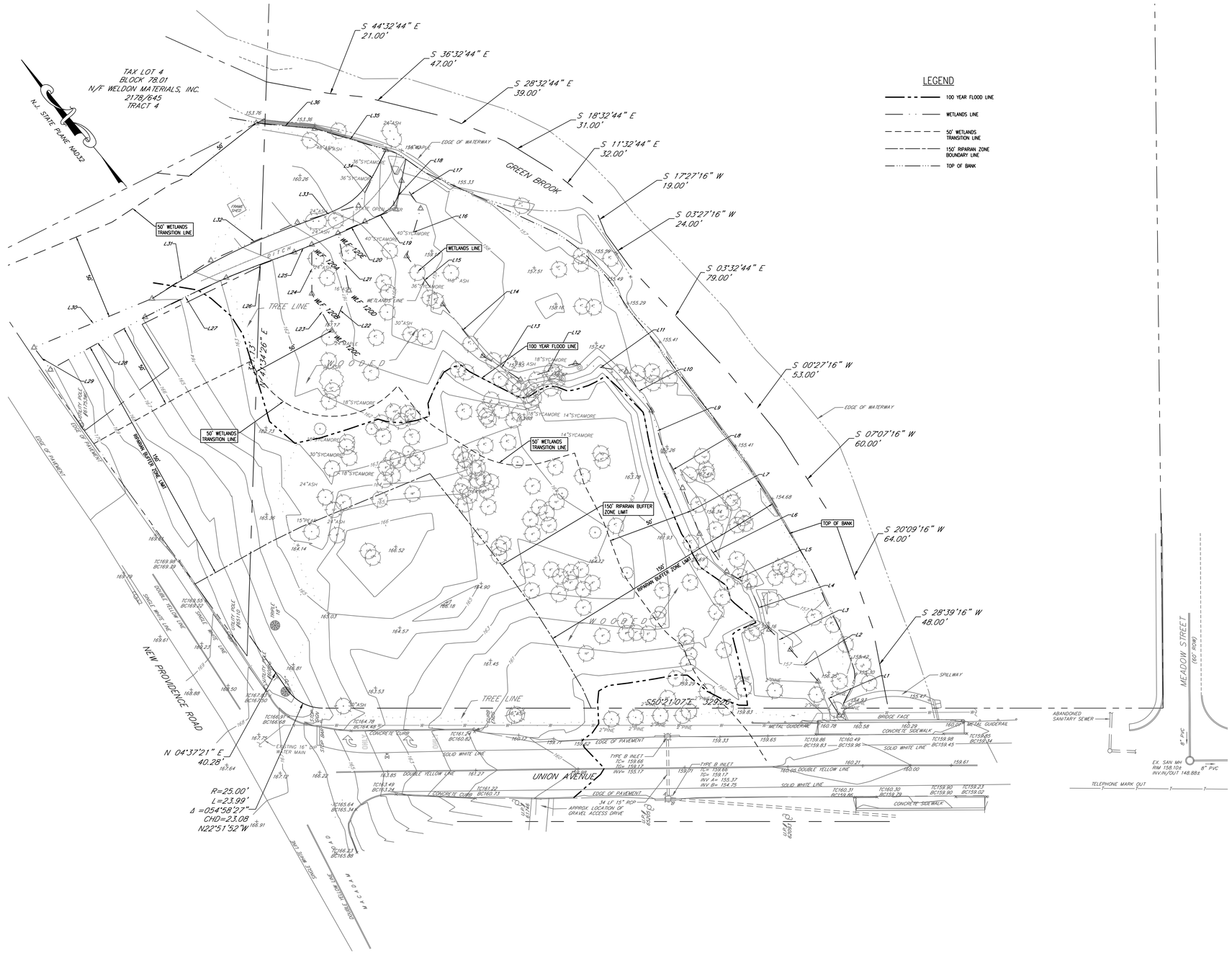


# EXISTING CONDITIONS / ENVIRONMENTAL CONSTRAINTS PLAN

SCALE: 1"=30'


Jarmel Kizel
ARCHITECTS AND ENGINEERS INC.
42 OKNER PARKWAY
LIVINGSTON, NEW JERSEY 07039
TEL: 973-994-9669
FAX: 973-994-4069
www.jarmelkizel.com


Architecture
Engineering
Interior Design
Implementation Services

ISSUE

| NO. | DATE | DESCRIPTION | INT. |
|---|---|---|---|
| 1. | 6.13.19 | COMPLETENESS REVIEW | GPG |
| 2. | 10.31.19 | PLANNING BOARD SUBMISSION | GPG |
| 3. | 12.02.19 | P.B. RE-SUBMISSION | GPG |
| 4. | 3.04.20 | P.B. RE-SUBMISSION | GPG |
| 5. | 9.04.20 | FOR 9.15.20 P.B. HEARING | GPG |

REVISION

| NO. | DATE | DESCRIPTION | INT. |
|---|---|---|---|
| 1. | 10.31.19 | PER NJDEP & TECH. REVIEW #1 | GPG |
| 2. | 12.02.19 | REVISED BUILDING LOCATION | APP |
| 3. | 8.31.20 | REV WETLAND LINE & GRADING | GPG |


**PRINCIPALS**

**MATTHEW B. JARMEL, AIA, MBA** — NJ: LIC AI0-12787; AZ: LIC 48159; MN: LIC 46404; CO: LIC ARC.401483; NC: LIC 10120; CT: LIC AR.0011415; NH: LIC 3501; DC: LIC ARC101849; NY: LIC 026673; DE: LIC 5S-0007256; OH: LIC A-99-12444; FL: LIC AR99965; PA: LIC RA-014651-R; GA: LIC RA011484; RI: LIC ARC.0004765; IA: LIC 06577; SC: LIC AR9163; IL: LIC 001.020069; TN: LIC 103850; MA: LIC AR10286; TX: LIC 20992; MD: LIC 12662; VA: LIC 0401 014089; ME: LIC 1301052189; VT: LIC 2453

**IRWIN H. KIZEL, AIA, PP** — NJ: LIC 21A00794700; CT: LIC 08029; NJ: PP LIC 33A00243100

**RICHARD A. JARMEL, PE** — NJ: LIC 37491; CT: LIC PEN0027735; MN: LIC 47482; FL: LIC 83149; NY: LIC 073898-1; MI: LIC 6201052339; PA: LIC PE070600; DE: LIC 18754; MA: LIC 50445; VT: LIC 18498; TX: LIC 123822

**ASSOCIATES**

**RONALD A. BROKENSHIRE, PE** — NJ: LIC GE45511; CT: LIC PEN.0032811; PA: LIC PE085817

**DAVID L. LESESNE, RA** — NJ: LIC AI-13231; CT: LIC AR.0011748; NY: LIC 026719; MA: LIC 31420; PA: LIC RA-405081

**MICHAEL J. VOBLAND, RA** — NY: LIC 036993

**GERARD P. GESARIO, PE** — NJ: LIC GE038255

**FREDERICK KINCAID, RA** — NJ: LIC 21AI01018294

**JEROME LESLIE EDEN, FAIA, PP** — NY: LIC 019853; NJ: LIC AI-00650-R; CT: LIC 019853; VA: LIC 0401 012073; IL: LIC 001.037694

**CHERYL SCHWEIKER, AIA** — NJ: LIC 21AI00269000; PA: LIC RA457997

NJ State Board Of Architects Authorization No. 16L
NJ State Board Of Engineers & Land Surveyors Authorization No. 24GA28053000


Project: **THE LEARNING EXPERIENCE**
**PRELIMINARY AND FINAL SITE PLAN**
**100 UNION AVENUE**
**BLOCK 78.01, LOT 1, TAX SHEET # 22**
**BOROUGH OF WATCHUNG**
**COUNTY OF SOMERSET, STATE OF NEW JERSEY**

| Project No: | Scale: |
|---|---|
| TLENJ-S-18-295 | 1" = 30' |
| Drawn By: A.P.P. | Approved By: G.P.G. |

Drawing Name: **EXISTING CONDITIONS / ENVIRONMENTAL CONSTRAINTS PLAN**

Drawing Number: **C-100**

Sheet No: **2** of: **17**

Initial Date: **MAY 30, 2019**

**GERARD P. GESARIO**
**PROFESSIONAL ENGINEER**
**N.J. LIC. #GE038255**

S:\PROJECTS\TLENJ-S-18-295 TLE WATCHUNG UNION AVENUE\CAD\18-295 C-100 EXSTING.DWG GGESARIO PLOTTED: 09/02/2020

SURVEY REFERENCE:

1. BOUNDARY & TOPOGRAPHY INFORMATION IS BASED ON A SURVEY TITLED "BOUNDARY AND TOPOGRAPHIC SURVEY, TAX LOT 1 – BLOCK 78.01, BOROUGH OF WATCHUNG, COUNTY OF SOMERSET, NEW JERSEY" BY KSS, KENNON SURVEY SERVICES INC., OF WARREN NEW JERSEY, DATED 6/5/19.

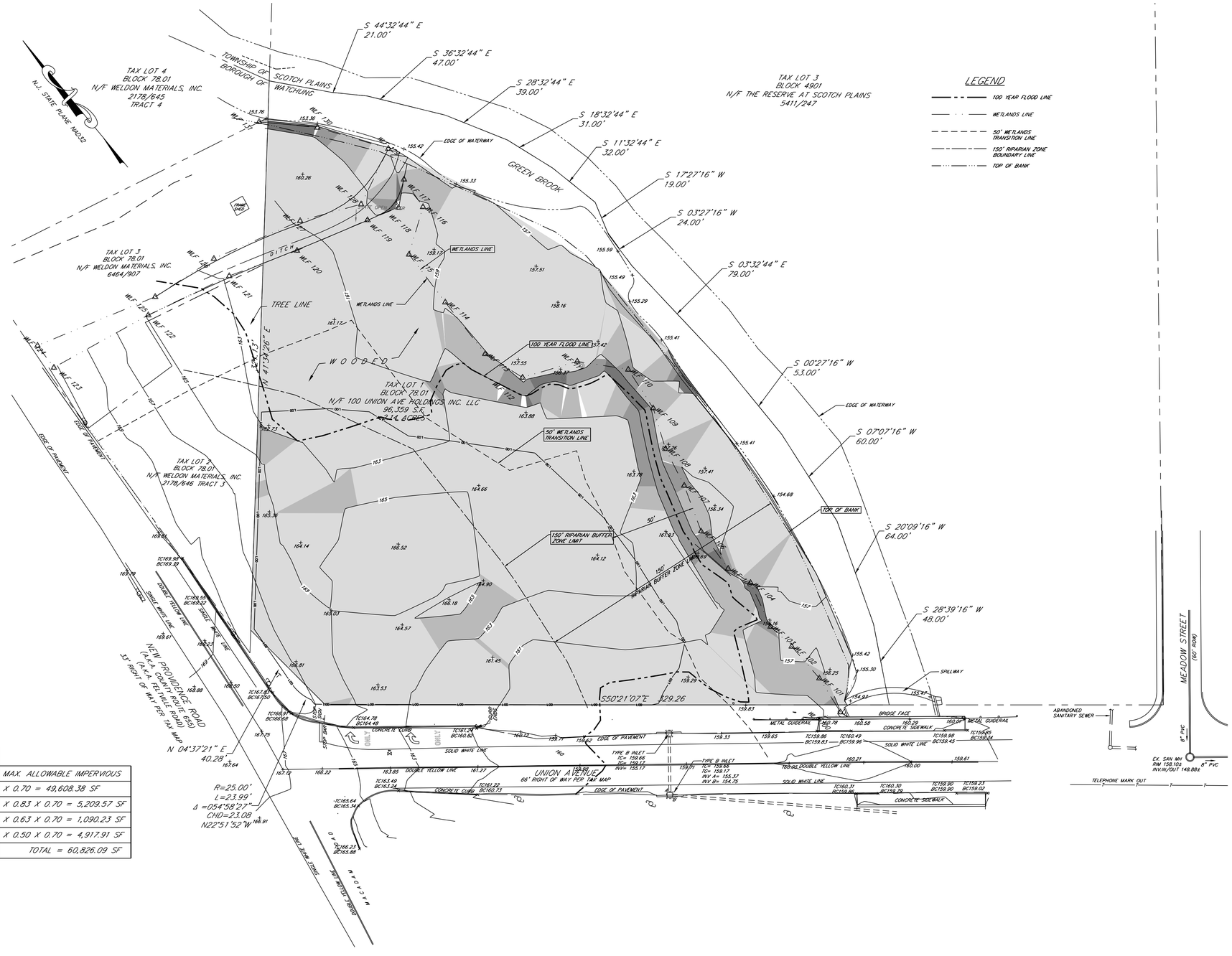


| Slopes Table | | | | | |
|---|---|---|---|---|---|
| Number | Minimum Slope | Maximum Slope | Color | | MAX. ALLOWABLE IMPERVIOUS |
| 1 | 0.00% | 9.90% | | 70,869.11 | X 0.70 = 49,608.38 SF |
| 2 | 10.00% | 19.90% | | 8,966.55 | X 0.83 X 0.70 = 5,209.57 SF |
| 3 | 20.00% | 29.90% | | 2,472.17 | X 0.63 X 0.70 = 1,090.23 SF |
| 4 | 30.00% | 100.00% | | 14,051.17* | X 0.50 X 0.70 = 4,917.91 SF |
| | | | | | TOTAL = 60,826.09 SF |

* INCLUDES AREA OF BROOK

# STEEP SLOPE ANALYSIS

SCALE: 1"=30'


Jarmel Kizel
ARCHITECTS AND ENGINEERS INC.
42 OKNER PARKWAY
LIVINGSTON, NEW JERSEY 07039
TEL: 973-994-9669
FAX: 973-994-4069
www.jarmelkizel.com


Architecture
Engineering
Interior Design
Implementation Services

ISSUE

| NO. | DATE | DESCRIPTION | INT. |
|---|---|---|---|
| 1. | 6.13.19 | COMPLETENESS REVIEW | GPG |
| 2. | 10.31.19 | PLANNING BOARD SUBMISSION | GPG |
| 3. | 12.02.19 | P.B. RE-SUBMISSION | GPG |
| 4. | 3.04.20 | P.B. RE-SUBMISSION | GPG |
| 5. | 9.04.20 | FOR 9.15.20 P.B. HEARING | GPG |

REVISION

| NO. | DATE | DESCRIPTION | INT. |
|---|---|---|---|
| 1. | 10.31.19 | PER NJDEP & TECH. REVIEW #1 | GPG |
| 2. | 12.02.19 | REVISED BUILDING LOCATION | APP |


**PRINCIPALS**

**MATTHEW B. JARMEL, AIA, MBA** NJ LIC AI0-12787; AZ LIC 48159; MN LIC 46404; CO LIC ARC401483; NC LIC 10120; CT LIC AR.0011415; NH LIC 3501; DC LIC ARC101849; NY LIC D24673; DE LIC 55-0007256; OH LIC A-99-12444; FL LIC AR98965; PA LIC RA-014851-8; GA LIC RA011484; RI LIC ARC.0004765; IA LIC 05577; SC LIC AR3143; IL LIC 001.020069; TN LIC 103850; MA LIC AR10086; TX LIC 20992; MD LIC 12662; VA LIC 0401 014089; NB LIC 1301052189; VT LIC 2453

**IRWIN H. KIZEL, AIA, PP** NJ LIC 21A00794700; CT LIC 18503; NJ PP LIC 33UI00243100

**RICHARD A. JARMEL, PE** NJ LIC 37491; CT LIC PEN0037735; MN LIC 47482; FL LIC 83149; NY LIC 073898-1; MI LIC 6201052339; PA LIC P0076600; DE LIC 18754; MA LIC 50445; VT LIC 8849R; TX LIC 123822

**ASSOCIATES**

**RONALD A. BROKENSHIRE, PE** NJ LIC GE45511; CT LIC PEN0032811; PA LIC PE085817

**DAVID L. LESESNE, RA** NJ LIC AI13731; CT LIC RA-0011748; PA LIC RA-405081

**MICHAEL J. VORLAND, RA** NY LIC 036893

**GERARD P. GESARIO, PE** NJ LIC GE038255

**FREDERICK KINCAID, RA** NJ LIC 21AI01182**94**

**JEROME LESLIE EBEN, FAIA, PP** NJ LIC AI 8883; PA LIC D-19153; NY LIC 019157; IL LIC 001-013694; VA LIC 0401-012073

**CHERYL SCHWEIKER, AIA** NJ LIC 21AI00269000; PA LIC RM07927

NJ State Board Of Architects Authorization No. 163
NJ State Board Of Engineers & Land Surveyors Authorization No. 24GA28053000


Project: **THE LEARNING EXPERIENCE**
**PRELIMINARY AND FINAL SITE PLAN**
**100 UNION AVENUE**
**BLOCK 78.01, LOT 1, TAX SHEET # 22**
**BOROUGH OF WATCHUNG**
**COUNTY OF SOMERSET, STATE OF NEW JERSEY**

Project No: **TLENJ-S-18-295**

Scale: **1" = 30'**

Drawn By: **A.P.P.**

Approved By: **G.P.G.**

Drawing Name:

**STEEP SLOPE ANALYSIS**

Drawing Number: **C-110**

Sheet No: **3** of: **17**

Initial Date: **MAY 30, 2019**

**GERARD P. GESARIO**
**PROFESSIONAL ENGINEER**
**N.J. LIC. #GE038255**


S:\PROJECTS\TLENJ-S-18-295 TLE WATCHUNG UNION AVENUE\CAD\18-295 C-110 SLOPE.DWG GGESARIO PLOTTED: 09/02/2020

SURVEY REFERENCE:

1. BOUNDARY & TOPOGRAPHY INFORMATION IS BASED ON A SURVEY TITLED "BOUNDARY AND TOPOGRAPHIC SURVEY, TAX LOT 1 – BLOCK 78.01, BOROUGH OF WATCHUNG, COUNTY OF SOMERSET, NEW JERSEY" BY KSS, KENNON SURVEY SERVICES INC., OF WARREN NEW JERSEY, DATED 6/5/19.

DEMOLITION NOTES:

1. CONTRACTOR SHALL VISIT THE SITE TO VERIFY EXISTING CONDITIONS AND SHALL VERIFY ALL DIMENSIONS IN FIELD PRIOR TO CONSTRUCTION AND NOTIFY ENGINEER OF ANY DISCREPANCY ON DRAWINGS.
2. THE CONTRACTOR IS RESPONSIBLE FOR THE DEMOLITION, REMOVAL AND DISPOSING IN A LEGAL MANNER IN A LOCATION APPROVED BY ALL GOVERNING AUTHORITIES, OF ALL CONCRETE PADS, ASPHALT PARKING, CURBS, ETC, SUCH THAT ALL THE IMPROVEMENTS SHOWN ON THE REMAINING PLANS CAN BE CONSTRUCTED.
3. CONTRACTOR SHALL BE RESPONSIBLE FOR NECESSARY DISCONNECTS OF THE EXISTING UTILITY AND RECONNECTION SHALL BE INCLUDED.
4. IT IS CONTRACTOR'S RESPONSIBILITY TO NOTIFY ALL UTILITY COMPANIES AS REQUIRED PRIOR TO DEMOLITION.
5. CONTRACTOR IS DESIGNATED TO MAKE REMOVALS AND DISPOSAL OF THE MATERIALS IS HIS RESPONSIBILITY.
6. CONTRACTOR SHALL KEEP THE JOB FREE OF DEBRIS AND MAKE FINAL CLEAN UP TO THE SATISFACTION OF THE OWNER.
7. CONTRACTOR SHALL CARRY OUT THE WORK OF THIS CONTRACT PLACING THE SAFETY AND PROTECTION OF THE SURROUNDING COMMUNITY AND PROPERTY AT THE HIGHEST PRIORITY.
8. THE CONTRACTOR SHALL IMPLEMENT ALL NECESSARY MEASURES TO PROTECT ADJACENT AND ON-SITE PROPERTY, STRUCTURES AND UTILITIES THAT ARE TO REMAIN INTACT WHILE PERFORMING THE SPECIFIED WORK.
9. THE CONTRACTOR SHALL ENSURE FREE AND SAFE PASSAGE OF PERSONS AROUND THE AREA OF THE DEMOLITION AS DIRECTED BY THE OWNER AND THE MUNICIPAL OFFICIALS. THE OWNER'S REPRESENTATIVE IS NOT RESPONSIBLE FOR JOBSITE SAFETY.
10. ALL SIDEWALK, CURBS, DRIVEWAYS, PIPES, STRUCTURES TO REMAIN SHALL BE PROTECTED FROM DAMAGE BY THE CONTRACTOR. ANY DAMAGE DURING CONSTRUCTION SHALL BE RESTORED, RECONSTRUCTED OR REPLACED BY THE CONTRACTOR AT HIS EXPENSE.
11. CONTRACTOR SHALL BE RESPONSIBLE TO PROVIDE TRAFFIC CONTROL DEVICES REQUIRED BY THE MUNICIPALITY AND LOCAL AGENCIES.
12. PULVERIZED CONCRETE OR MASONRY SHALL NOT BE USED AS BACKFILL MATERIAL.
13. IF ANY HAZARDOUS MATERIALS ARE ENCOUNTERED THE OWNER/ENGINEER SHALL BE NOTIFIED IMMEDIATELY.
14. CONTRACTOR SHALL BE RESPONSIBLE EACH DAY TO INSPECT AND REMOVE ALL DIRT, GRAVEL AND LOOSE MATERIAL DUMPED, SPILLED, ETC FROM THE CONSTRUCTION SITE ONTO OTHER SITES, ROW, PUBLIC OR PRIVATE STREET.
15. CONTRACTOR SHALL REDUCE THE AIRBORNE DUST DURING THE DEMOLITION AND MAINTAIN EROSION CONTROL DEVICES AS REQUIRED.
16. THE CONTRACTOR IS RESPONSIBLE FOR REMOVING ALL DEBRIS FROM THE SITE AND DISPOSING THE DEBRIS IN A LAWFUL MANNER. THE CONTRACTOR IS RESPONSIBLE FOR OBTAINING ALL PERMITS REQUIRED FOR DEMOLITION AND DISPOSAL. PRIOR TO DEMOLITION OCCURRING, ALL EROSION CONTROL DEVICES ARE TO BE INSTALLED.
17. SHOULD REMOVAL AND/OR RELOCATION ACTIVITIES DAMAGE FENCING, CURBING, PAVEMENT, LIGHTING AND/OR STORM INLETS STRUCTURES, THEN THE CONTRACTOR SHALL PROVIDE NEW MATERIALS/STRUCTURES IN ACCORDANCE WITH THE CONTRACT DOCUMENTS. ALL CONSTRUCTION MATERIALS SHALL BE NEW.
18. CONTRACTOR MAY LIMIT SAW-CUT & PAVEMENT REMOVAL TO ONLY THOSE AREAS WHERE IT IS REQUIRED AS SHOWN ON THESE CONSTRUCTION PLANS BUT IF ANY DAMAGE IS INCURRED ON ANY OF THE SURROUNDING PAVEMENT, CURBING, ETC., THE CONTRACTOR SHALL BE RESPONSIBLE FOR ITS REMOVAL AND REPAIR.
19. CONTRACTOR SHALL REPLACE ALL CURBING ALONG THE SITE FRONTAGE THAT HE DAMAGES (AS DIRECTED BY THE TOWNSHIP OR COUNTY, AS APPLICABLE).
20. NO TOPSOIL SHALL BE REMOVED FROM THE SITE OR USED AS FILL. TOPSOIL MOVED DURING THE COURSE OF CONSTRUCTION SHALL BE REDISTRIBUTED ON ALL REGRADED SURFACES SO AS TO PROVIDE AT LEAST SIX (6) INCHES OF EVEN COVER TO ALL DISTURBED AREAS AND SHALL BE STABILIZED BY SEEDING OR PLANTING.

LIST OF EXISTING TREES TO BE REMOVED

| | | | | | |
|---|---|---|---|---|---|
| 1. | 18" SYCAMORE | 21. | 6" | 41. | 9" |
| 2. | 18" SYCAMORE | 22. | 6" | 42. | 6" |
| 3. | 18" SYCAMORE | 23. | 8" | 43. | 6" |
| 4. | 30" SYCAMORE | 24. | 6" | 44. | 6" |
| 5. | 24" ASH | 25. | 9" | 45. | 9" |
| 6. | 15" PEAR | 26. | 6" | 46. | 9" |
| 7. | 9" | 27. | 12" | 47. | 9" |
| 8. | 15" | 28. | 4" | 48. | 8" |
| 9. | 6" | 29. | 9" | 49. | 4" |
| 10. | 9" | 30. | 6" | 50. | 6" |
| 11. | 6" | 31. | 4" | 51. | 2" PINE |
| 12. | 12" | 32. | 12" | 52. | 2" |
| 13. | 12" | 33. | 9" | 53. | 2" |
| 14. | 18" | 34. | 10" | 54. | 24" |
| 15. | 12" | 35. | 6" | 55. | 6" |
| 16. | 12" | 36. | 6" | 56. | 4" |
| 17. | 9" | 37. | 12" | 57. | 2" |
| 18. | 18" | 38. | 9" | 58. | 2" |
| 19. | 15" | 39. | 6" | 59. | 15" |
| 20. | 9" | 40. | 6" | 60. | 6"+ |
| | | | | 61. | 2" PINE |
| | | | | 62. | 2" PINE |

TREE REMOVAL / REPLACEMENT NOTES:

1. A TOTAL OF 50 TREES NEED TO BE REMOVED; OF WHICH 4 TREES ARE WITHIN THE PRIMARY BUILDING ENVELOPE AND THE REMAINDER 46 TREES ARE OUTSIDE THE PRIMARY BUILDING.
2. A TOTAL OF 46 NEW TREES WILL NEED TO BE PLANTED.

# DEMOLITION PLAN

SCALE: 1"=30'


Jarmel Kizel
ARCHITECTS AND ENGINEERS INC.
42 OKNER PARKWAY
LIVINGSTON, NEW JERSEY 07039
TEL: 973-994-9669
FAX: 973-994-4069
www.jarmelkizel.com

Architecture
Engineering
Interior Design
Implementation Services


ISSUE

| NO. | DATE | DESCRIPTION | INT. |
|---|---|---|---|
| 1. | 6.13.19 | COMPLETENESS REVIEW | GPG |
| 2. | 10.31.19 | PLANNING BOARD SUBMISSION | GPG |
| 3. | 12.02.19 | P.B. RE-SUBMISSION | GPG |
| 4. | 3.04.20 | P.B. RE-SUBMISSION | GPG |
| 5. | 9.04.20 | FOR 9.15.20 P.B. HEARING | GPG |

REVISION

| NO. | DATE | DESCRIPTION | INT. |
|---|---|---|---|
| 1. | 10.31.19 | PER NJDEP & TECH. REVIEW #1 | GPG |
| 2. | 12.02.19 | REVISED BUILDING LOCATION | APP |
| 3. | 8.31.20 | REV WETLAND LINE & GRADING | GPG |


PRINCIPALS
MATTHEW B. JARMEL, AIA, MBA — NJ LIC AIO-12787; AZ LIC 48139; MN LIC 46404; CO LIC ARC-401483; NC LIC 10120; CT LIC AR.0011415; NH LIC 3501; DC LIC ARC.101849; NY LIC 026673; DE LIC 55-0007256; OH LIC A-99-12444; FL LIC AR99165; PA LIC RA-01-14551-R; GA LIC RAD11484; RI LIC ARC.0004765; IA LIC 05577; SC LIC AR.9163; IL LIC 001.020069; TN LIC 103850; MA LIC AR10286; TX LIC 20992; MD LIC 12662; VA LIC 0401 014089; MI LIC 1301052189; VT LIC 2453
IRWIN H. KIZEL, AIA, PP — NJ LIC 21A00794700; CT LIC 08029; NJ PP LIC 33U00243100
RICHARD A. JARMEL, PE — NJ LIC 37491; CT LIC PEN.0027735; MN LIC 47482; FL LIC 83149; NY LIC 073898-1; MI LIC 6201052339; PA LIC PE076400; DE LIC 18754; MA LIC 50445; VT LIC 8849R; TX LIC 123822
ASSOCIATES
RONALD A. BROKENSHIRE, PE — NJ LIC GE45511; CT LIC PEN.0032811; PA LIC PE080817
DAVID L. LESESNE, RA — NJ LIC AI.13231; CT LIC AR.0011748; NY LIC 024719; MA LIC 31420; PA LIC RA-405081
MICHAEL J. VOBLAND, RA — NY LIC 036993
GERARD P. GESARIO, PE — NJ LIC GE038255
FREDERICK KINCAID, RA — NJ LIC 21AI01182; PA LIC RA-405081
JEROME LESLIE EDELMAN, FAIA, PP — NJ LIC AI.01833; NY LIC 026058; NJ LIC 0101 037694; MA LIC 0401 012073
CHERYL SCHWEIKER, AIA — NJ LIC 21AR02069000; PA LIC RA407927
NJ State Board Of Architects Authorization No. 16L
NJ State Board Of Engineers & Land Surveyors Authorization No. 24GA28053000


Project: **THE LEARNING EXPERIENCE**
**PRELIMINARY AND FINAL SITE PLAN**
**100 UNION AVENUE**
**BLOCK 78.01, LOT 1, TAX SHEET # 22**
**BOROUGH OF WATCHUNG**
**COUNTY OF SOMERSET, STATE OF NEW JERSEY**

| Project No: | Scale: |
|---|---|
| TLENJ-S-18-295 | 1" = 30' |
| Drawn By: A.P.P. | Approved By: G.P.G. |

Drawing Name: **DEMOLITION PLAN**

Drawing Number: **C-200**

Sheet No: **4** of: **17**

Initial Date: **MAY 30, 2019**

**GERARD P. GESARIO**
**PROFESSIONAL ENGINEER**
**N.J. LIC. #GE038255**


S:\PROJECTS\TLENJ-S-18-295 TLE WATCHUNG UNION AVENUE\CAD\18-295 C-200 DEMO.DWG GGESARIO PLOTTED: 09/02/2020

SURVEY REFERENCE:

1. BOUNDARY & TOPOGRAPHY INFORMATION IS BASED ON A SURVEY TITLED "BOUNDARY AND TOPOGRAPHIC SURVEY, TAX LOT 1 – BLOCK 78.01, BOROUGH OF WATCHUNG, COUNTY OF SOMERSET, NEW JERSEY" BY KSS, KENNON SURVEY SERVICES INC., OF WARREN NEW JERSEY, DATED 6/5/19.

GENERAL NOTES:

1. REFER TO ARCHITECTURAL DRAWINGS FOR EXACT DOOR LOCATIONS.
2. ALL CONSTRUCTION IS TO BE PERFORMED IN CONFORMANCE WITH ALL APPLICABLE LOCAL, COUNTY, STATE, AND FEDERAL CODES.
3. CONSTRUCTION MATERIALS AND METHODS NOT OTHERWISE SPECIFIED OR SHOWN HEREIN SHALL CONFORM TO NJDOT STANDARD SPECIFICATIONS FOR ROAD AND BRIDGE CONSTRUCTION (LATEST EDITION AND AMENDMENTS).
4. THESE PLANS DEPICT THE SITE WORK IMPROVEMENTS FOR THIS PROJECT. THE CONTRACTOR SHALL FURNISH, INSTALL, TEST AND COMPLETE ALL WORK TO THE SATISFACTION OF THE ENGINEER AND OWNER IN ACCORDANCE WITH THE CONTRACT DOCUMENTS. THE CONTRACTOR SHALL BE SOLELY RESPONSIBLE FOR MEANS AND METHODS, TECHNIQUES, SEQUENCE OF CONSTRUCTION AND JOB SITE SAFETY. AS SUCH, THESE PLANS ARE NOT INTENDED TO REPRESENT SPECIFIC INSTRUCTIONS REQUIRED FOR SITE WORK CONSTRUCTION. THE CONTRACTOR SHALL BE RESPONSIBLE TO CONSTRUCT ALL IMPROVEMENTS DEPICTED ON THESE PLANS IN ACCORDANCE WITH ALL APPLICABLE RULES, REGULATIONS AND LAWS IN EFFECT AT THE TIME OF CONSTRUCTION.
5. THE CONTRACTOR SHALL ACCEPT THE SITE AS IS. THE CONTRACTOR SHALL ASSESS CONDITIONS, AND THE KIND, QUALITY AND QUANTITY OF WORK REQUIRED. THE OWNER MAKES NO GUARANTEE IN REGARD TO THE ACCURACY OF ANY AVAILABLE INFORMATION WHICH WAS OBTAINED DURING INVESTIGATIONS. THE CONTRACTOR SHALL MAKE A THOROUGH INSPECTION OF THE SITE IN ORDER TO REVEAL EXISTING CONDITIONS, CORRELATE CONDITIONS WITH THE DRAWINGS AND RESOLVE ANY POSSIBLE CONSTRUCTION CONFLICTS WITH THE OWNER AND ENGINEER PRIOR TO BIDDING, ORDERING MATERIALS, AND COMMENCEMENT OF WORK. THE CONTRACTOR SHALL MAKE ADDITIONAL TOPOGRAPHIC SURVEYS HE DEEMS NECESSARY, PROVIDED THEY ARE COORDINATED WITH THE OWNER. ANY CONDITIONS DETERMINED BY THE CONTRACTOR THAT DIFFER FROM THE INFORMATION SHOWN ON THE DRAWINGS THAT ARE NOT BROUGHT TO THE ATTENTION OF THE OWNER AND ENGINEER PRIOR TO THE START OF WORK SHALL NOT BE CONSIDERED GROUNDS FOR ADDITIONAL PAYMENT OR CHANGES TO THE CONTRACT DURATION, OR ANY OTHER CLAIMS AGAINST THE OWNER OR OWNER'S ENGINEER.
6. THE CONTRACTOR SHALL PROVIDE WRITTEN REQUESTS FOR INFORMATION (RFIS) TO THE OWNER AND ENGINEER PRIOR TO THE CONSTRUCTION OF ANY SPECIFIC SITE WORK ITEM. THE (RFI) SHALL BE IN A FORM ACCEPTABLE TO OWNER AND ENGINEER AND SHALL ALLOW FOR A MINIMUM OF TWO WORK DAYS OR ADDITIONAL REASONABLE TIME FOR A WRITTEN REPLY. RFIS SHALL BE NUMBERED CONSECUTIVELY BY DATE SUBMITTED. THE CONTRACTOR SHALL BE SOLELY RESPONSIBLE FOR SITE WORK ITEMS CONSTRUCTED DIFFERENTLY THAN INTENDED OR AS DEPICTED ON THE PLANS.
8. THE CONTRACTOR IS RESPONSIBLE TO CONTACT NEW JERSEY ONE CALL NOT LESS THAN 3 BUSINESS DAYS AND NOT MORE THAN 10 BUSINESS DAYS PRIOR TO THE BEGINNING OF ANY EXCAVATION OR DEMOLITION. NEW JERSEY ONE CALL INFORMATION – PHONE: 1-800-272-1000, WEB: WWW.NJ1-CALL.ORG.
9. THE CONTRACTOR SHALL SUPERVISE AND DIRECT THE WORK, USING THE CONTRACTOR'S BEST SKILL AND ATTENTION. THE CONTRACTOR SHALL BE SOLELY RESPONSIBLE AND HAVE CONTROL OVER CONSTRUCTION MEANS, METHODS, TECHNIQUES, SEQUENCES AND JOB SITE SAFETY.
10. THE MUNICIPAL ENGINEER MUST BE NOTIFIED ONE WEEK PRIOR TO THE CONSTRUCTION OF ANY CURBING, SIDEWALKS, PAVEMENT GRADING, OR OTHER UTILITIES.
11. THE CONTRACTOR MUST NOTIFY THE DESIGN ENGINEER OF ANY CONDITION OF CONFLICTS THAT WILL ALTER THE INTENT OF THE DESIGN HEREIN.
12. CONTRACTOR IS REQUIRED TO REMOVE ALL UNSUITABLE MATERIALS FROM THE SITE IN ACCORDANCE WITH ALL APPLICABLE STATE AND LOCAL REGULATIONS.
13. ALL PROPOSED IMPROVEMENTS TO BE IN ACCORDANCE WITH CURRENT ADA AND NJ BARRIER FREE CODE REQUIREMENTS.
14. SUBJECT TO ALL APPLICABLE RULES, REGULATIONS, ORDINANCES AND STATUTES OF THE TOWNSHIP OF WAYNE, PASSAIC COUNTY AND STATE OF NEW JERSEY AND ANY OTHER JURISDICTION.
15. NO DEED RESTRICTIONS OR COVENANTS EXIST ON SITE NOR ARE ANY PROPOSED.
16. CONTRACTOR SHALL REPLACE ALL CURBING ALONG THE SITE FRONTAGE THAT HE DAMAGES (AS DIRECTED BY THE TOWNSHIP OR COUNTY, AS APPLICABLE).
17. ALL WORK WITHIN THE COUNTY ROAD RIGHT OF WAY SHALL BE ACCORDING TO SOMERSET COUNTY STANDARDS.
18. CONTRACTOR SHALL RE-STRIPE UNION AVENUE TO MATCH EXISTING STRIPING AND PAVEMENT MARKINGS ALL IN ACCORDANCE WITH SOMERSET COUNTY STANDARDS.

SIGN LEGEND AND DETAILS

| SYMBOL | QUAN. | USDOT FHA DESIGNATION | SIGN DETAIL |
|---|---|---|---|
| S | 2 | R1-1 | STOP (24" × 24") |
| A1 | 2 | R7-8 | RESERVED PARKING (12" × 18") |
| A2 | 2 | R7-8p | PENALTY $250 1ST OFFENSE SUBSEQUENT OFFENSES $250 MIN. AND/OR UP TO 90 DAYS COMMUNITY SERVICE TOW-AWAY ZONE (12" × 10") |
| A3 | 2 | R7-8B | VAN ACCESSIBLE (12" × 6") |
| RTO | 1 | R3-5R | ONLY (18" × 24") |
| EEO | 2 | CUSTOM | EMERGENCY ENTRANCE ONLY (18" × 24") |

SIGN NOTES:
1. ALL SIGNS SHALL CONFORM TO THE MANUAL ON TRAFFIC CONTROL DEVICES.
2. SIGNS, SIGN POSTS AND THEIR FOUNDATIONS AND SIGN MOUNTING SHALL BE SO CONSTRUCTED AS TO HOLD SIGNS IN A PROPER AND PERMANENT POSITION, TO RESIST SWAYING IN THE WIND OR DISPLACEMENT BY VANDALISM.
3. REFER TO MOUNTING DETAILS FOR HEIGHTS. ALL SIGNS SHALL BE MEASURED FROM PAVEMENT OR GROUND TO BOTTOM OF SIGN.

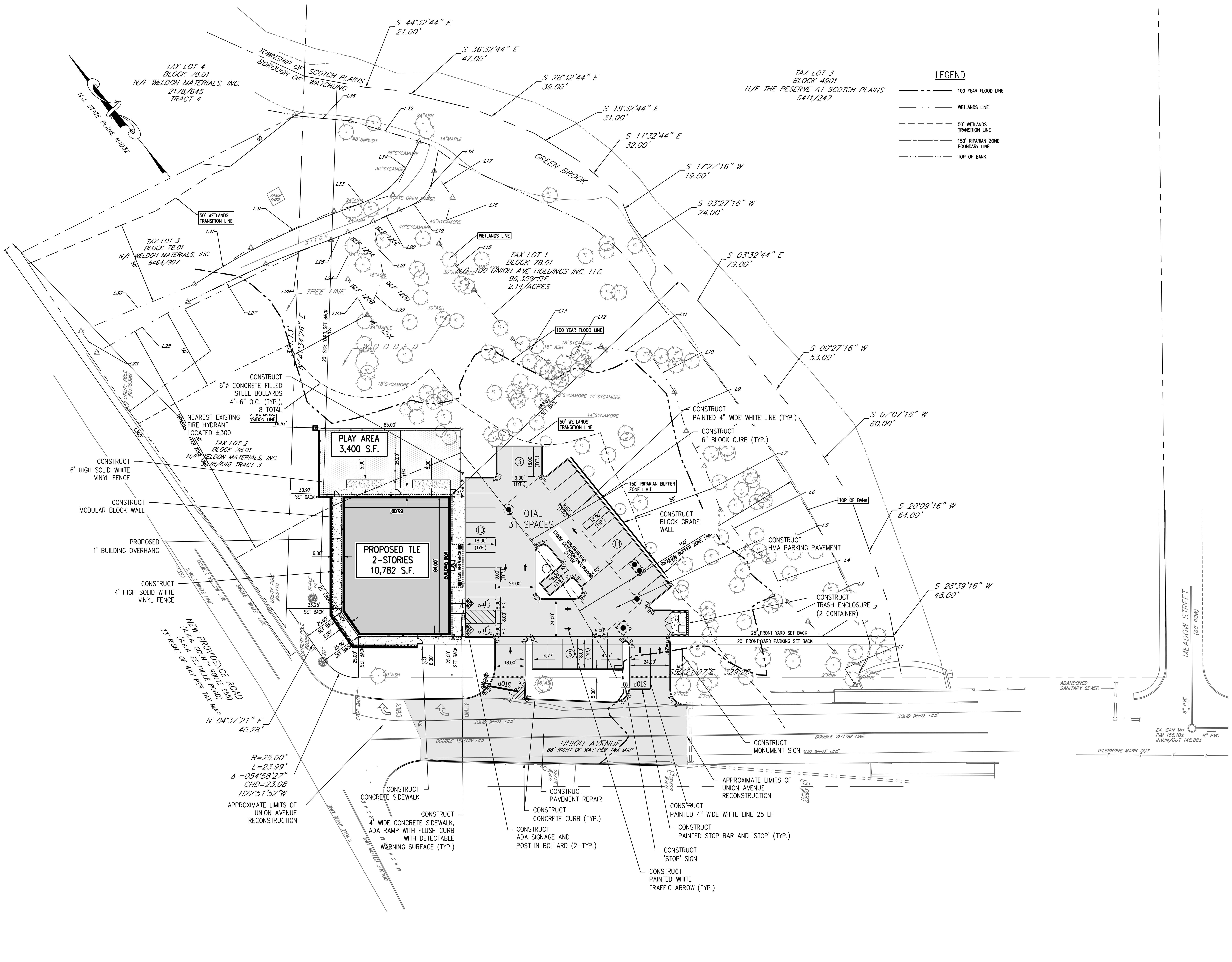


# SITE PLAN
SCALE: 1"=30'

Jarmel **Kizel**
ARCHITECTS AND ENGINEERS INC.
42 OKNER PARKWAY
LIVINGSTON, NEW JERSEY 07039
TEL: 973-994-9669
FAX: 973-994-4069
www.jarmelkizel.com

Architecture
Engineering
Interior Design
Implementation Services

ISSUE

| NO. | DATE | DESCRIPTION | INT. |
|---|---|---|---|
| 1. | 6.13.19 | COMPLETENESS REVIEW | GPG |
| 2. | 10.31.19 | PLANNING BOARD SUBMISSION | GPG |
| 3. | 12.02.19 | P.B. RE-SUBMISSION | GPG |
| 4. | 3.04.20 | P.B. RE-SUBMISSION | GPG |
| 5. | 9.04.20 | FOR 9.15.20 P.B. HEARING | GPG |

REVISION

| NO. | DATE | DESCRIPTION | INT. |
|---|---|---|---|
| 1. | 10.31.19 | PER NJDEP & TECH. REVIEW #1 | GPG |
| 2. | 12.02.19 | REVISED BUILDING LOCATION | APP |
| 3. | 8.31.20 | REV WETLAND LINE & GRADING | GPG |


**PRINCIPALS**
**MATTHEW B. JARMEL, AIA, MBA**
AZ LIC 48159; CO LIC ARC-401483; CT LIC ARI.0011415; DC LIC ARC101849; DE LIC S5-0007256; FL LIC AR98965; GA LIC RA011484; IA LIC 05577; IL LIC 001.020069; MA LIC AR10286; MD LIC 12662; MI LIC 1301052189
NJ LIC AI0-12787; MN LIC 46404; NC LIC 10120; NH LIC 3501; NY LIC 024673; OH LIC A-99-12444; PA LIC RA-014851-B; RI LIC ARC.0004765; SC LIC AR.9163; TN LIC 103850; TX LIC 20992; VA LIC 0401 014089; VT LIC 2453
**IRWIN H. KIZEL, AIA, PP**
CT LIC 08522; NJ LIC 21AI00794700; NJ PP LIC 33LI00243100
**RICHARD A. JARMEL, PE**
CT LIC PEN0027735; FL LIC 83149; MI LIC 6201052339; DE LIC 18754; VT LIC 88498
NJ LIC 37491; MN LIC 47482; NY LIC 073898-1; PA LIC PE070600; MA LIC 50445; TX LIC 123822
**ASSOCIATES**
**RONALD A. BROKENSHIRE, PE** CT LIC PEN.0032811; NJ LIC GE45511; PA LIC PE085817
**DAVID L. LESESNE, RA** CT LIC ARI-0011748; MA LIC 31425; NJ LIC AI 13231; NY LIC 024719; PA LIC RA-405081
**MICHAEL J. VORLAND, RA** NY LIC 036993
**GERARD P. GESARIO, PE** NJ LIC GE038255
**FREDERICK KINCAID, RA** NJ LIC 21A1018294
**JEROME LESLIE EBEN, FAIA, PP** PA LIC 016502-B; VA LIC 0401 012073; NJ LIC AI 8883; NY LIC 019151; IL LIC 001 017694
**CHERYL SCHWEIKER, AIA** NJ LIC 21AI02069000; PA LIC RA407927
NJ State Board Of Architects Authorization No. 161
NJ State Board Of Engineers & Land Surveyors Authorization No. 24GA28053000


Project: **THE LEARNING EXPERIENCE**
**PRELIMINARY AND FINAL SITE PLAN**
**100 UNION AVENUE**
**BLOCK 78.01, LOT 1, TAX SHEET # 22**
**BOROUGH OF WATCHUNG**
**COUNTY OF SOMERSET, STATE OF NEW JERSEY**

| Project No: | Scale: |
|---|---|
| TLENJ-S-18-295 | 1" = 30' |
| Drawn By: A.P.P. | Approved By: G.P.G. |

Drawing Name: **SITE PLAN**

Drawing Number: **C-300**

Sheet No: **5** of: **17**

Initial Date: **MAY 30, 2019**

**GERARD P. GESARIO PROFESSIONAL ENGINEER N.J. LIC. #GE038255**

S:\PROJECTS\TLENJ-S-18-295 TLE WATCHUNG UNION AVENUE\CAD\18-295 C-300 SITE.DWG GGESARIO PLOTTED: 09/02/2020

SURVEY REFERENCE:

1. BOUNDARY & TOPOGRAPHY INFORMATION IS BASED ON A SURVEY TITLED "BOUNDARY AND TOPOGRAPHIC SURVEY, TAX LOT 1 – BLOCK 78.01, BOROUGH OF WATCHUNG, COUNTY OF SOMERSET, NEW JERSEY" BY KSS, KENNON SURVEY SERVICES INC., OF WARREN NEW JERSEY, DATED 6/5/19.

GRADING AND DRAINAGE PLAN NOTES

1. THE CONTRACTOR IS SPECIFICALLY CAUTIONED THAT THE LOCATION AND/OR ELEVATION OF EXISTING UTILITIES AS SHOWN ON THESE PLANS IS BASED ON SURVEY AND, WHERE POSSIBLE MEASUREMENTS SHOULD BE TAKEN IN THE FIELD. THE INFORMATION IS NOT TO BE RELIED ON AS BEING EXACT OR COMPLETE. THE CONTRACTOR MUST CALL THE APPROPRIATE UTILITY COMPANY AT LEAST 48 HOURS BEFORE ANY EXCAVATION TO REQUEST EXACT FIELD LOCATION OF UTILITIES. IT SHALL BE THE RESPONSIBILITY OF THE CONTRACTOR TO RELOCATE ALL EXISTING UTILITIES WHICH CONFLICT WITH THE PROPOSED IMPROVEMENTS SHOWN ON THE PLANS.

2. CONTRACTOR SHALL REFER TO ARCHITECTURAL PLANS AND SPECIFICATIONS FOR ACTUAL LOCATIONS OF ALL UTILITY ENTRANCES TO INCLUDE SANITARY SEWER LATERALS, DOMESTIC AND FIRE PROTECTION WATER SERVICE, ELECTRICAL, TELEPHONE AND GAS SERVICE. CONTRACTOR SHALL COORDINATE INSTALLATION OF UTILITIES IN SUCH A MANNER AS TO AVOID CONFLICTS AND TO ENSURE PROPER DEPTHS ARE ACHIEVED AS WELL AS COORDINATING WITH THE UTILITY COMPANIES AS TO LOCATION AND SCHEDULING OF CONNECTIONS TO THEIR FACILITIES.

3. EXCAVATED MATERIAL CONTAINING ROCK OR STONE GREATER THAN SIX (6) INCHES IN LARGEST DIMENSION IS UNACCEPTABLE AS FILL TO WITHIN THE PROPOSED BUILDING AND PAVING AREA.

4. ROCK OR STONE LESS THAN SIX (6) INCHES IN LARGEST DIMENSION IS ACCEPTABLE AS FILL TO WITHIN TWENTY-FOUR (24) INCHES OF SURFACE OF PROPOSED SURGED WHEN MIXED WITH SUITABLE MATERIAL AS PERMITTED BY THE OWNER'S GEOTECHNICAL ENGINEER.

5. ROCK OR STONE LESS THAN TWO (2) INCHES IN LARGEST DIMENSION AND MIXED WITH SUITABLE MATERIAL IS ACCEPTABLE AS FILL WITHIN THE UPPER TWENTY-FOUR (24) INCH OF PROPOSED SUBGRADE AS PERMITTED BY THE OWNER'S GEOTECHNICAL ENGINEER.

6. ALL SITEWORK AND EARTHWORK OPERATIONS CONDUCTED ON THE SITE TO BE PERFORMED IN ACCORDANCE WITH THE GEOTECHNICAL ENGINEERING REPORT PREPARED BY THE OWNER'S GEOTECHNICAL ENGINEER.

7. COMPACTION CRITERIA FOR FILL PLACED IN THE FOLLOWING AREAS SHALL MEET OR EXCEED THE FOLLOWING MINIMUM PERCENTAGE OF MAXIMUM MODIFIED PROCTOR DRY DENSITY AS DETERMINED BY ASTM D-1557 USED ON REPRESENTATIVE SOIL SAMPLES, UNLESS MORE STRINGENT CRITERIA GIVEN ELSEWHERE:

| FILL AREA | STANDARD PROCTOR DRY DENSITY |
|---|---|
| SIDEWALKS | 95% |
| PAVEMENTS AND ROADWAYS | 95% |
| LANDSCAPE AREAS | 93% |
| TRENCH BACKFILL | SAME AS SURROUNDING AREA |

8. PROTECT SUBGRADE FROM EXCESSIVE WHEEL LOADING DURING CONSTRUCTION, INCLUDING TRUCKS AND DUMP TRUCKS.

9. REMOVE AREAS OF FINISHED SUBGRADE FOUND TO HAVE INSUFFICIENT COMPACTION DENSITY TO DEPTH NECESSARY AND REPLACE IN A MANNER THAT WILL COMPLY WITH COMPACTION REQUIREMENTS BY USE OF MATERIAL EQUAL TO OR BETTER THAN BEST SUBGRADE MATERIAL ON SITE. SURFACE OF SUBGRADE AFTER COMPACTION SHALL BE HARD, UNIFORM, SMOOTH, STABLE, AND TRUE TO GRADE AND CROSS-SECTION.

10. GRADE ALL AREAS WHERE FINISH GRADE ELEVATIONS OR CONTOURS ARE INDICATED ON DRAWINGS, OTHER THAN PAVED AREAS AND BUILDINGS, INCLUDING EXCAVATED AREAS, FILLED AND TRANSITION AREAS, AND LANDSCAPED AREAS. GRADED AREAS SHALL BE UNIFORM AND SMOOTH, FREE FROM ROCK, DEBRIS, OR IRREGULAR SURFACE CHANGES. FINISHED SUBGRADE SURFACE SHALL NOT BE MORE THAN 0.10 FEET ABOVE OR BELOW ESTABLISHED FINISHED SUBGRADE ELEVATION, AND ALL GROUND SURFACES SHALL VARY UNIFORMLY BETWEEN INDICATED ELEVATIONS. FINISH DITCHES SHALL BE GRADED TO ALLOW FOR PROPER DRAINAGE WITHOUT PONDING AND IN A MANNER THAT WILL MINIMIZE EROSION POTENTIAL.

11. ALL CONCRETE, UNLESS OTHERWISE NOTED OR SPECIFIED BY REGULATORY AUTHORITIES, SHALL BE 4000 PSI.

12. REPRESENTATIVES OF THE MUNICIPALITY SHALL HAVE THE RIGHT TO INSPECT THE DRAINAGE FACILITIES LOCATED ON THE PROPOSED LOT FROM TIME TO TIME AS DEEMED NECESSARY.

13. CATCH BASINS SHALL BE CLEANED OUT PERIODICALLY TO PREVENT THE BUILDUP OF SEDIMENT AND DEBRIS IN STRUCTURES.

14. ALL ROOF DRAINS TO BE CONNECTED UNDERGROUND DIRECTLY TO THE STORM SYSTEM.

15. ROOF LEADER CLEANOUTS LOCATED IN GRASSED AREAS SHALL BE PLASTIC SCREW CAPS WHILE ROOF LEADER CLEANOUTS LOCATED WITHIN CONCRETE AREAS SHALL BE FLUSH BRASS CAPS.

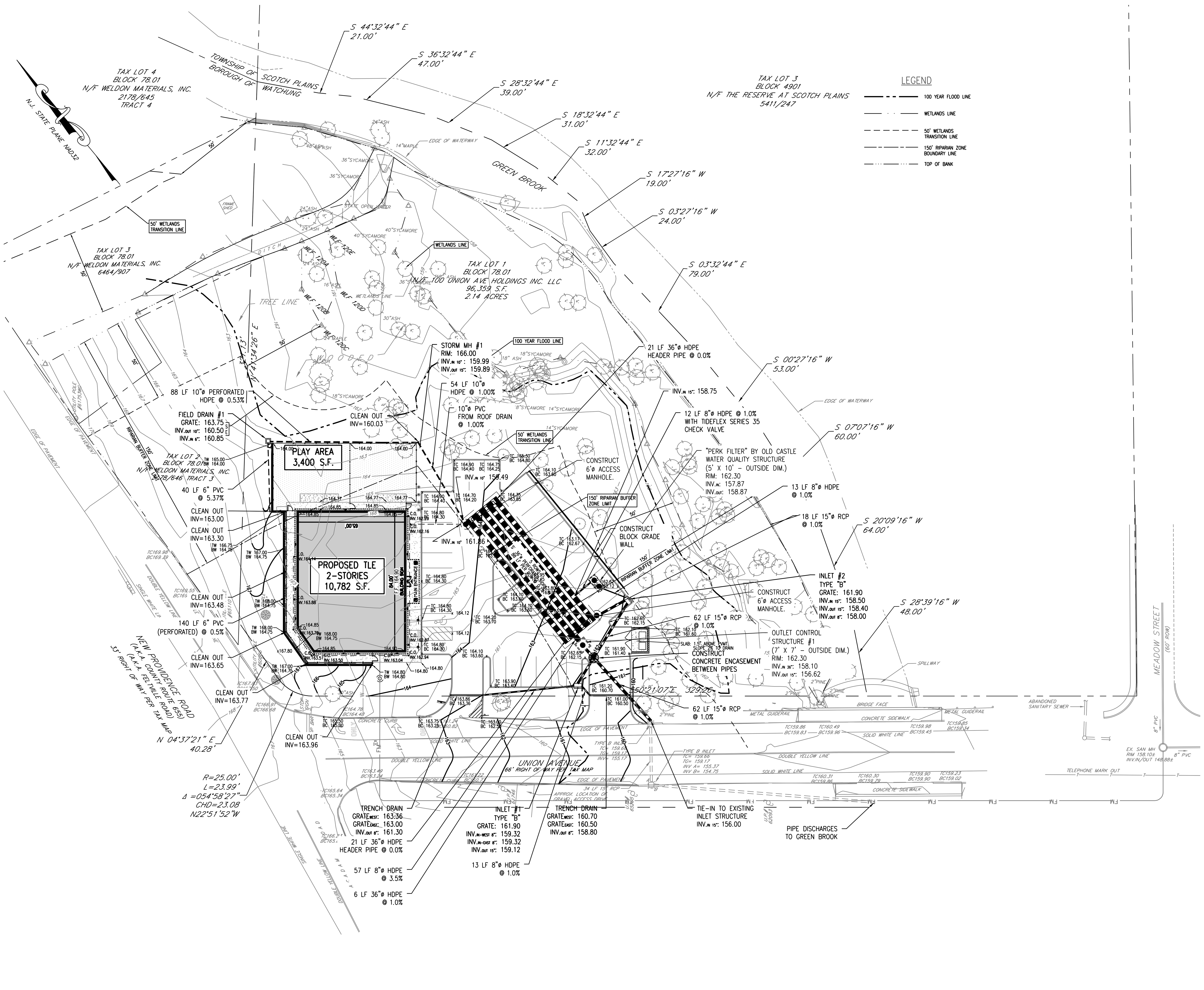


# GRADING AND DRAINAGE PLAN

SCALE: 1"=30'


Jarmel Kizel
ARCHITECTS AND ENGINEERS INC.
42 OKNER PARKWAY
LIVINGSTON, NEW JERSEY 07039
TEL: 973-994-9669
FAX: 973-994-4069
www.jarmelkizel.com


Architecture
Engineering
Interior Design
Implementation Services

ISSUE

| NO. | DATE | DESCRIPTION | INT. |
|---|---|---|---|
| 1. | 6.13.19 | COMPLETENESS REVIEW | GPG |
| 2. | 10.31.19 | PLANNING BOARD SUBMISSION | GPG |
| 3. | 12.02.19 | P.B. RE-SUBMISSION | GPG |
| 4. | 3.04.20 | P.B. RE-SUBMISSION | GPG |
| 5. | 9.04.20 | FOR 9.15.20 P.B. HEARING | GPG |

REVISION

| NO. | DATE | DESCRIPTION | INT. |
|---|---|---|---|
| 1. | 10.31.19 | PER NJDEP & TECH. REVIEW #1 | GPG |
| 2. | 12.02.19 | REVISED BUILDING LOCATION | APP |
| 3. | 8.31.20 | REV WETLAND LINE & GRADING | GPG |


**PRINCIPALS**

**MATTHEW B. JARMEL, AIA, MBA** — NJ LIC AI0-12787; AZ LIC 48159; MN LIC 46404; CO LIC ARC-401483; NC LIC 10120; CT LIC ARI.0011415; NH LIC 3501; DC LIC ARC101849; NY LIC 024673; DE LIC S5-0007256; OH LIC A-99-12444; FL LIC AR98965; PA LIC RA-014851-B; GA LIC RA011484; RI LIC ARC.0004765; IA LIC 05577; SC LIC AR.9163; IL LIC 001.020069; TN LIC 103850; MA LIC AR10286; TX LIC 20992; MD LIC 12662; VA LIC 0401 014089; MI LIC 1301052189; VT LIC 2453

**IRWIN H. KIZEL, AIA, PP** — NJ LIC 21AI00794700; CT LIC 08522; NJ PP LIC 33LI00243100

**RICHARD A. JARMEL, PE** — NJ LIC 37491; CT LIC PEN0027735; MN LIC 47482; FL LIC 83149; NY LIC 073898-1; MI LIC 6201052339; PA LIC PE070600; DE LIC 18754; MA LIC 50445; VT LIC 88498; TX LIC 123822

**ASSOCIATES**

**RONALD A. BROKENSHIRE, PE** — CT LIC PEN.0032811; NJ LIC GE45511; PA LIC PE085817

**DAVID L. LESESNE, RA** — CT LIC ARI-0011748; MA LIC 31425; NJ LIC AI 13231; NY LIC 024719; PA LIC RA-405081

**MICHAEL J. VORLAND, RA** — NY LIC 036993

**GERARD P. GESARIO, PE** — NJ LIC GE038255

**FREDERICK KINCAID, RA** — NJ LIC 21A1018294

**JEROME LESLIE EBEN, FAIA, PP** — PA LIC 016502-B; VA LIC 0401 012073; NJ LIC AI 8883; NY LIC 019151; IL LIC 001 017694

**CHERYL SCHWEIKER, AIA** — NJ LIC 21AI02069000; PA LIC RA407927

NJ State Board Of Architects Authorization No. 161
NJ State Board Of Engineers & Land Surveyors Authorization No. 24GA28053000


Project: **THE LEARNING EXPERIENCE**
**PRELIMINARY AND FINAL SITE PLAN**
**100 UNION AVENUE**
**BLOCK 78.01, LOT 1, TAX SHEET # 22**
**BOROUGH OF WATCHUNG**
**COUNTY OF SOMERSET, STATE OF NEW JERSEY**

| | |
|---|---|
| Project No: **TLENJ-S-18-295** | Scale: **1" = 30'** |
| Drawn By: **A.P.P.** | Approved By: **G.P.G.** |

Drawing Name: **GRADING AND DRAINAGE PLAN**

Drawing Number: **C-400**

Sheet No: **6** of: **17**

Initial Date: **MAY 30, 2019**

**GERARD P. GESARIO**
**PROFESSIONAL ENGINEER**
**N.J. LIC. #GE038255**


S:\PROJECTS\TLENJ-S-18-295 TLE WATCHUNG UNION AVENUE\CAD\18-295 C-400 GRADING.DWG   GGESARIO   PLOTTED: 09/02/2020

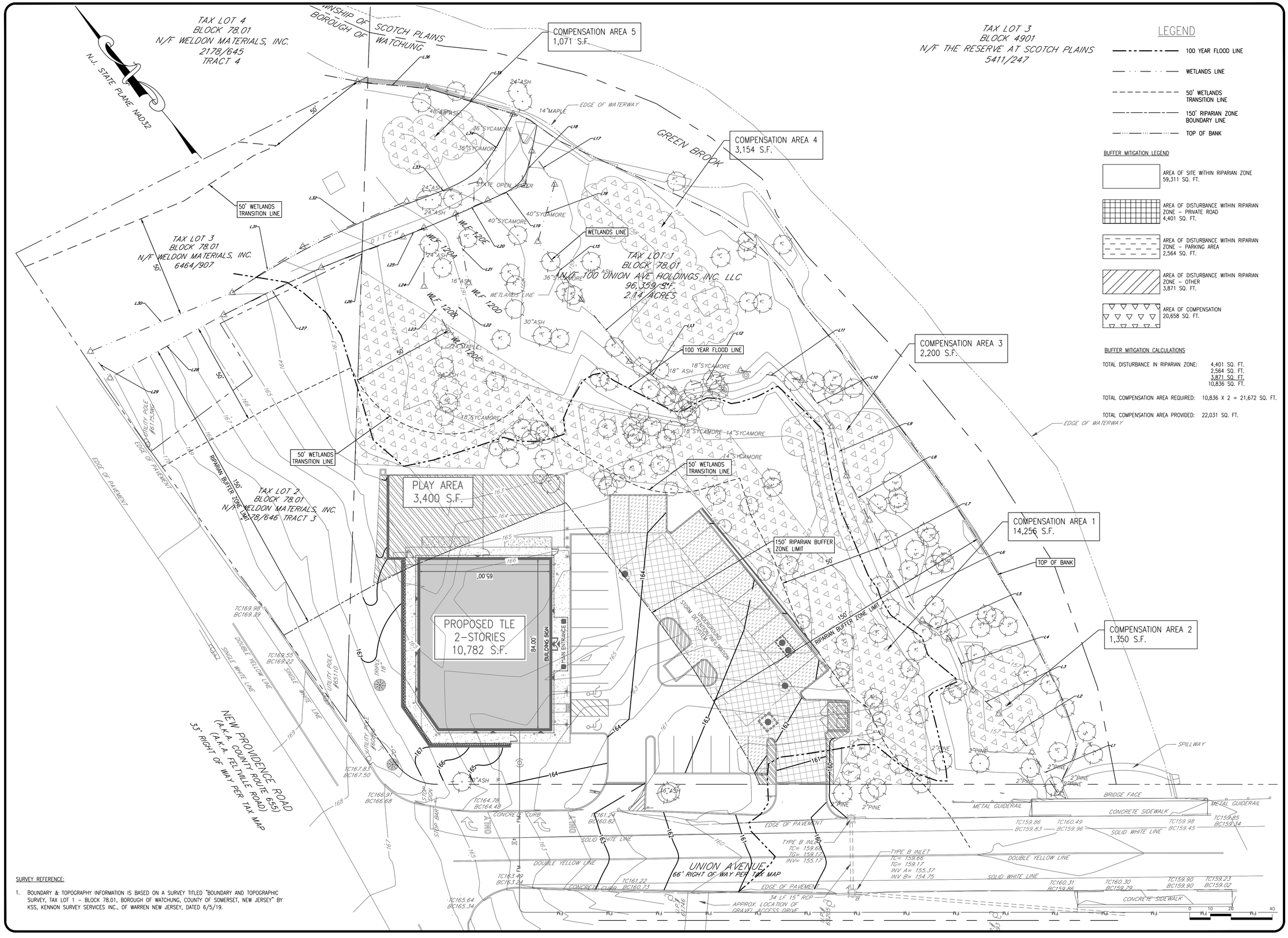


SURVEY REFERENCE:

1. BOUNDARY & TOPOGRAPHY INFORMATION IS BASED ON A SURVEY TITLED "BOUNDARY AND TOPOGRAPHIC SURVEY, TAX LOT 1 – BLOCK 78.01, BOROUGH OF WATCHUNG, COUNTY OF SOMERSET, NEW JERSEY" BY KSS, KENNON SURVEY SERVICES INC., OF WARREN NEW JERSEY, DATED 6/5/19.

S:\PROJECTS\TLENJ-S-18-295 TLE WATCHUNG UNION AVENUE\CAD\18-295 C-410 GRADING-MITIGATION.DWG GGE58ARIO PLOTTED: 09/02/2020


Jarmel Kizel
ARCHITECTS AND ENGINEERS INC.
42 OKNER PARKWAY
LIVINGSTON, NEW JERSEY 07039
TEL: 973-994-9669
FAX: 973-994-4069
www.jarmelkizel.com

Architecture
Engineering
Interior Design
Implementation Services


ISSUE

| NO. | DATE | DESCRIPTION | INT. |
|---|---|---|---|
| 1. | 6.13.19 | COMPLETENESS REVIEW | GPG |

REVISION

| NO. | DATE | DESCRIPTION | INT. |
|---|---|---|---|


**PRINCIPALS**

**MATTHEW B. JARMEL, AIA, MBA**
AZ LIC 48159
CO LIC ARC-401483
CT LIC ARI.0011415
DC LIC ARC101849
DE LIC 55-0007256
FL LIC AR98965
GA LIC RA011484
IA LIC 05577
IL LIC 001.0200669
IN LIC AR10286
MD LIC 13431
ME LIC 1201032189
NJ LIC AIO-12787
NM LIC 46404
NC LIC 10120
NH LIC 3501
NY LIC 026673
OH LIC A-99-12444
PA LIC RA-014551-R
RI LIC ARC-0004765
SC LIC AR.9163
TN LIC 102859
UT LIC 5549797
VA LIC 0401 014089
VT LIC 2453

**IRWIN H. KIZEL, AIA, PP**
CT LIC 006037
NJ LIC 21A00794700
NJ PP LIC 33A00243100

**RICHARD A. JARMEL, PE**
CO LIC PE.0027735
FL LIC 83149
MI LIC 6201032339
DE LIC 18754
VT LIC 8849R
NJ LIC 37481
NM LIC 21401
NY LIC 075898-1
PA LIC PE076600
MA LIC 50445
TX LIC 123822

**ASSOCIATES**

**RONALD A. BROKENSHIRE, PE**
CT LIC NEW.0032811
NJ LIC PE058517
NJ LIC AI 13231
NY LIC 024719
PA LIC RA-005081
NY LIC 036993

**DAVID L. LESSENS, RA**
CT LIC NR-0011748
MA LIC 31425

**MICHAEL J. VORLAND, RA**

**GERARD P. GESARIO, PE**
NJ LIC GE058255

**FREDERICK KINCAID, RA**
NJ LIC AI 8883
NY LIC 019151
IL LIC 001 015694

**JEROME LESLIE EBEN, FAIA, PP**
PA LIC 016502-R
VA LIC 0401 012073
NJ LIC 21A00269000
PA LIC RA-007927

**CHERYL SCHWEIKER, AIA**

NJ State Board Of Architects Authorization No. 163
NJ State Board Of Engineers & Land Surveyors Authorization No. 24GA28053000


Project: **THE LEARNING EXPERIENCE**
**PRELIMINARY AND FINAL SITE PLAN**
**100 UNION AVENUE**
**BLOCK 78.01, LOT 1, TAX SHEET # 22**
**BOROUGH OF WATCHUNG**
**COUNTY OF SOMERSET, STATE OF NEW JERSEY**

| Project No: | Scale: |
|---|---|
| TLENJ-S-18-295 | 1" = 20' |
| Drawn By: A.P.P. | Approved By: G.P.G. |

Drawing Name:

**NJDEP MITIGATION PLAN**

Drawing Number: **C-410**

Sheet No: **6A** of: **17**

Initial Date: **AUGUST 31, 2020**

**GERARD P. GESARIO**
**PROFESSIONAL ENGINEER**
**N.J. LIC. #GE038255**

SURVEY REFERENCE:

1. BOUNDARY & TOPOGRAPHY INFORMATION IS BASED ON A SURVEY TITLED "BOUNDARY AND TOPOGRAPHIC SURVEY, TAX LOT 1 – BLOCK 78.01, BOROUGH OF WATCHUNG, COUNTY OF SOMERSET, NEW JERSEY" BY KSS, KENNON SURVEY SERVICES INC., OF WARREN NEW JERSEY, DATED 6/5/19.

GENERAL NOTES:

1. REFER TO ARCHITECTURAL DRAWINGS FOR EXACT DOOR LOCATIONS.
2. ALL CONSTRUCTION IS TO BE PERFORMED IN CONFORMANCE WITH ALL APPLICABLE LOCAL, COUNTY, STATE, AND FEDERAL CODES.
3. CONSTRUCTION MATERIALS AND METHODS NOT OTHERWISE SPECIFIED OR SHOWN HEREIN SHALL CONFORM TO NJDOT STANDARD SPECIFICATIONS FOR ROAD AND BRIDGE CONSTRUCTION (LATEST EDITION AND AMENDMENTS).
4. THESE PLANS DEPICT THE SITE WORK IMPROVEMENTS FOR THIS PROJECT. THE CONTRACTOR SHALL FURNISH, INSTALL, TEST AND COMPLETE ALL WORK TO THE SATISFACTION OF THE ENGINEER AND OWNER IN ACCORDANCE WITH THE CONTRACT DOCUMENTS. THE CONTRACTOR SHALL BE SOLELY RESPONSIBLE FOR MEANS AND METHODS, TECHNIQUES, SEQUENCE OF CONSTRUCTION AND JOB SITE SAFETY. AS SUCH, THESE PLANS ARE NOT INTENDED TO REPRESENT SPECIFIC INSTRUCTIONS REQUIRED FOR SITE WORK CONSTRUCTION. THE CONTRACTOR SHALL BE RESPONSIBLE TO CONSTRUCT ALL IMPROVEMENTS DEPICTED ON THESE PLANS IN ACCORDANCE WITH ALL APPLICABLE RULES, REGULATIONS AND LAWS IN EFFECT AT THE TIME OF CONSTRUCTION.
5. THE CONTRACTOR SHALL ACCEPT THE SITE AS IS. THE CONTRACTOR SHALL ASSESS CONDITIONS, AND THE KIND, QUALITY AND QUANTITY OF WORK REQUIRED. THE OWNER MAKES NO GUARANTEE IN REGARD TO THE ACCURACY OF ANY AVAILABLE INFORMATION WHICH WAS OBTAINED DURING INVESTIGATIONS. THE CONTRACTOR SHALL MAKE A THOROUGH INSPECTION OF THE SITE IN ORDER TO REVEAL EXISTING CONDITIONS, CORRELATE CONDITIONS WITH THE DRAWINGS AND RESOLVE ANY POSSIBLE CONSTRUCTION CONFLICTS WITH THE OWNER AND ENGINEER PRIOR TO BIDDING, ORDERING MATERIALS, AND COMMENCEMENT OF WORK. THE CONTRACTOR SHALL MAKE ADDITIONAL TOPOGRAPHIC SURVEYS HE DEEMS NECESSARY, PROVIDED THEY ARE COORDINATED WITH THE OWNER. ANY CONDITIONS DETERMINED BY THE CONTRACTOR THAT DIFFER FROM THE INFORMATION SHOWN ON THE DRAWINGS THAT ARE NOT BROUGHT TO THE ATTENTION OF THE OWNER AND ENGINEER PRIOR TO THE START OF WORK SHALL NOT BE CONSIDERED GROUNDS FOR ADDITIONAL PAYMENT OR CHANGES TO THE CONTRACT DURATION, OR ANY OTHER CLAIMS AGAINST THE OWNER OR OWNER'S ENGINEER.
6. THE CONTRACTOR SHALL PROVIDE WRITTEN REQUESTS FOR INFORMATION (RFIS) TO THE OWNER AND ENGINEER PRIOR TO THE CONSTRUCTION OF ANY SPECIFIC SITE WORK ITEM. THE (RFI) SHALL BE IN A FORM ACCEPTABLE TO OWNER AND ENGINEER AND SHALL ALLOW FOR A MINIMUM OF TWO WORK DAYS OR ADDITIONAL REASONABLE TIME FOR A WRITTEN REPLY. RFIS SHALL BE NUMBERED CONSECUTIVELY BY DATE SUBMITTED. THE CONTRACTOR SHALL BE SOLELY RESPONSIBLE FOR SITE WORK ITEMS CONSTRUCTED DIFFERENTLY THAN INTENDED OR AS DEPICTED ON THE PLANS.
8. THE CONTRACTOR IS RESPONSIBLE TO CONTACT NEW JERSEY ONE CALL NOT LESS THAN 3 BUSINESS DAYS AND NOT MORE THAN 10 BUSINESS DAYS PRIOR TO THE BEGINNING OF ANY EXCAVATION OR DEMOLITION. NEW JERSEY ONE CALL INFORMATION – PHONE: 1-800-272-1000, WEB: WWW.NJ1-CALL.ORG.
9. THE CONTRACTOR SHALL SUPERVISE AND DIRECT THE WORK, USING THE CONTRACTOR'S BEST SKILL AND ATTENTION. THE CONTRACTOR SHALL BE SOLELY RESPONSIBLE AND HAVE CONTROL OVER CONSTRUCTION MEANS, METHODS, TECHNIQUES, SEQUENCES AND JOB SITE SAFETY.
10. THE MUNICIPAL ENGINEER MUST BE NOTIFIED ONE WEEK PRIOR TO THE CONSTRUCTION OF ANY CURBING, SIDEWALKS, PAVEMENT GRADING, OR OTHER UTILITIES.
11. THE CONTRACTOR MUST NOTIFY THE DESIGN ENGINEER OF ANY CONDITION OF CONFLICTS THAT WILL ALTER THE INTENT OF THE DESIGN HEREIN.
12. CONTRACTOR IS REQUIRED TO REMOVE ALL UNSUITABLE MATERIALS FROM THE SITE IN ACCORDANCE WITH ALL APPLICABLE STATE AND LOCAL REGULATIONS.
13. ALL PROPOSED IMPROVEMENTS TO BE IN ACCORDANCE WITH CURRENT ADA AND NJ BARRIER FREE CODE REQUIREMENTS.
14. SUBJECT TO ALL APPLICABLE RULES, REGULATIONS, ORDINANCES AND STATUTES OF THE TOWNSHIP OF WWATCHUNG, SOMERSET COUNTY AND STATE OF NEW JERSEY AND ANY OTHER JURISDICTION.
15. NO DEED RESTRICTIONS OR COVENANTS EXIST ON SITE NOR ARE ANY PROPOSED.
16. CONTRACTOR SHALL REPLACE ALL CURBING ALONG THE SITE FRONTAGE THAT HE DAMAGES (AS DIRECTED BY THE TOWNSHIP OR COUNTY, AS APPLICABLE).
17. ALL WORK WITHIN THE COUNTY ROAD RIGHT OF WAY SHALL BE ACCORDING TO SOMERSET COUNTY STANDARDS.
18. UNDERGROUND ELECTRIC SERVICE LOCATION TO BE DETERMINED FROM UTILITY COMPANY.
19. GAS SERVICE LOCATION TO BE DETERMINED PRIOR TO FINAL APPROVAL.
20. ALL MECHANICAL/HVAC EQUIPMENT WILL BE MOUNTED ON THE ROOFTOP AND SCREENED FROM VIEW. REFER TO ARCHITECTURAL PLANS FOR SCREENING.

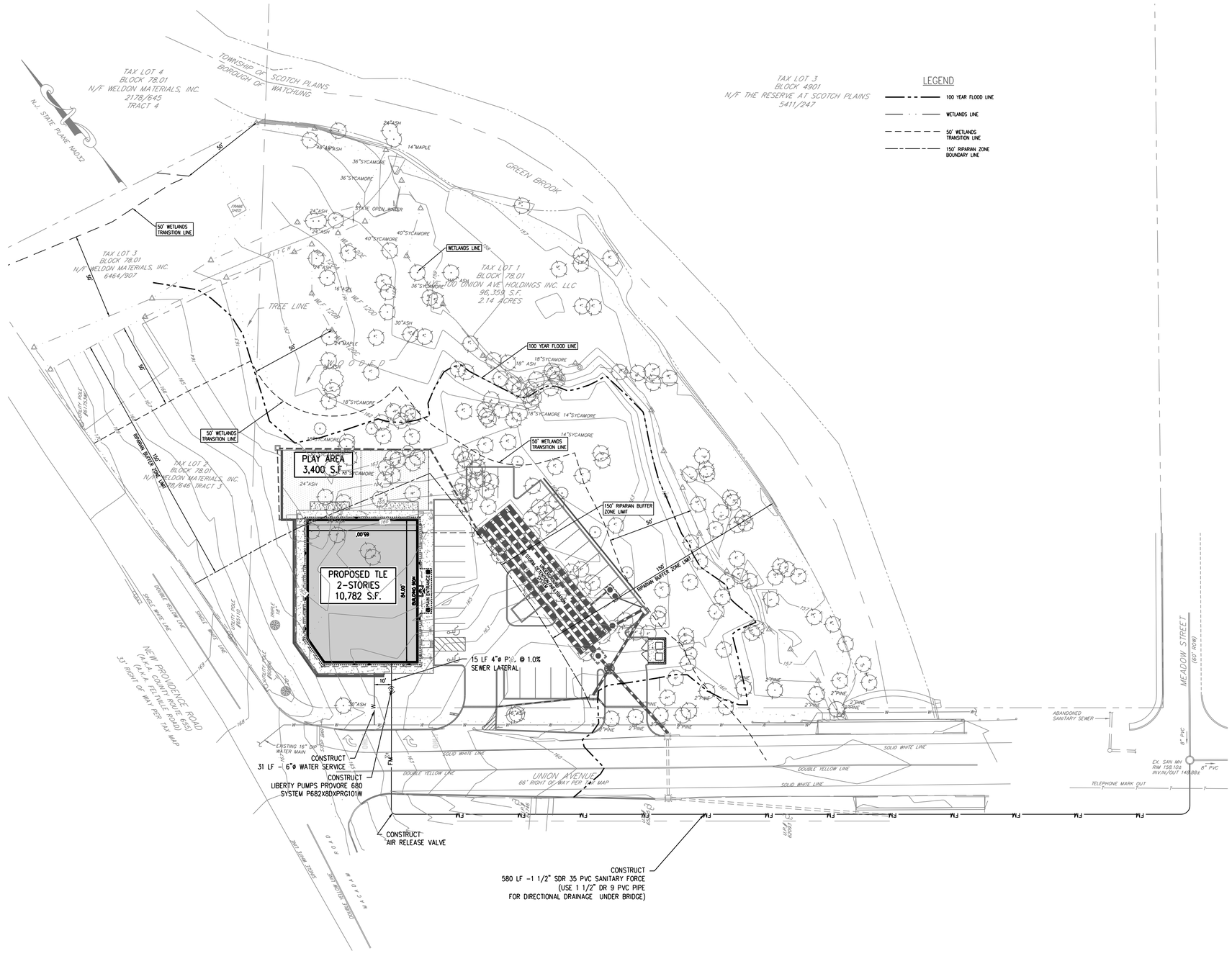


# UTILITY PLAN

SCALE: 1"=30'


Jarmel Kizel
ARCHITECTS AND ENGINEERS INC.
42 OKNER PARKWAY
LIVINGSTON, NEW JERSEY 07039
TEL: 973-994-9669
FAX: 973-994-4069
www.jarmelkizel.com

Architecture
Engineering
Interior Design
Implementation Services


ISSUE

| NO. | DATE | DESCRIPTION | INT. |
|---|---|---|---|
| 1. | 6.13.19 | COMPLETENESS REVIEW | GPG |
| 2. | 10.31.19 | PLANNING BOARD SUBMISSION | GPG |
| 3. | 12.02.19 | P.B. RE-SUBMISSION | GPG |
| 4. | 3.04.20 | P.B. RE-SUBMISSION | GPG |
| 5. | 9.04.20 | FOR 9.15.20 P.B. HEARING | GPG |

REVISION

| NO. | DATE | DESCRIPTION | INT. |
|---|---|---|---|
| 1. | 10.31.19 | PER NJDEP & TECH. REVIEW #1 | GPG |
| 2. | 12.02.19 | REVISED BUILDING LOCATION | APP |
| 3. | 8.31.20 | REV WETLAND LINE & GRADING | GPG |


**PRINCIPALS**

**MATTHEW B. JARMEL, AIA, MBA**
AZ LIC 48159 | NJ LIC AID-12787
CO LIC ARC-401483 | MN LIC 46404
CT LIC ARC001415 | NC LIC 10120
DC LIC ARC101849 | NH LIC 3501
DE LIC SS-0007256 | NY LIC 024673
FL LIC AR98965 | OH LIC A-99-12444
GA LIC 6401484 | PA LIC RA-014851-8
IA LIC 05577 | RI LIC ARC.0004765
IL LIC 001-020069 | SC LIC AR.9163
MA LIC AR10286 | TN LIC 103850
MD LIC 12662 | TX LIC 20992
ME LIC LIC-1501052189 | VA LIC 0401 014089
CT LIC 08523 | VT LIC 2453
NJ LIC 21AI00394700
NJ PP LIC 33U00243100

**IRWIN H. KIZEL, AIA, PP**
NJ LIC 21AI00394700
NJ PP LIC 33U00243100

**RICHARD A. JARMEL, PE**
CT LIC PENG027735 | MN LIC 47482
FL LIC 82149 | NY LIC 073898-1
MI LIC 6201052339 | PA LIC PE070600
DE LIC 18754 | MA LIC 50445
VT LIC 08498 | TX LIC 123822

**ASSOCIATES**

**RONALD A. BROKENSHIRE, PE**
NJ LIC GE45511
PA LIC PE085811

**DAVID L. LESSNER, RA**
NJ LIC AI-13231
CT LIC AR-0011748 | NY LIC 024719
MA LIC 31425 | PA LIC RA-405081

**MICHAEL J. VORLAND, RA**
NY LIC 036993

**GERARD P. GESARIO, PE**
NJ LIC GE038255

**FREDERICK KINCAID, RA**
NJ LIC 21AI01802974

**JEROME LESLIE EBEN, FAIA, PP**
NJ LIC 21AI00269000
PA LIC 024010-E
IL LIC 001-017694

**CHERYL SCHWEIKER, AIA**
NJ LIC 21AI00269000
PA LIC RA407927

NJ State Board Of Architects Authorization No. 3
NJ State Board Of Engineers & Land Surveyors Authorization No. 24GA28053000


Project: **THE LEARNING EXPERIENCE**
**PRELIMINARY AND FINAL SITE PLAN**
**100 UNION AVENUE**
**BLOCK 78.01, LOT 1, TAX SHEET # 22**
**BOROUGH OF WATCHUNG**
**COUNTY OF SOMERSET, STATE OF NEW JERSEY**

| Project No: | Scale: |
|---|---|
| TLENJ-S-18-295 | 1" = 30' |
| Drawn By: A.P.P. | Approved By: G.P.G. |

Drawing Name: **UTILITY PLAN**

Drawing Number: **C-500**

Sheet No: 7 of: 17

Initial Date: **MAY 30, 2019**

**GERARD P. GESARIO**
**PROFESSIONAL ENGINEER**
**N.J. LIC. #GE038255**


S:\PROJECTS\TLENJ-S-18-295 TLE WATCHUNG UNION AVENUE\CAD\18-295 C-500 UTILITY.DWG GGESARIO PLOTTED: 09/02/2020

SURVEY REFERENCE:

1. BOUNDARY & TOPOGRAPHY INFORMATION IS BASED ON A SURVEY TITLED "BOUNDARY AND TOPOGRAPHIC SURVEY, TAX LOT 1 – BLOCK 78.01, BOROUGH OF WATCHUNG, COUNTY OF SOMERSET, NEW JERSEY" BY KSS, KENNON SURVEY SERVICES INC., OF WARREN NEW JERSEY, DATED 6/5/19.

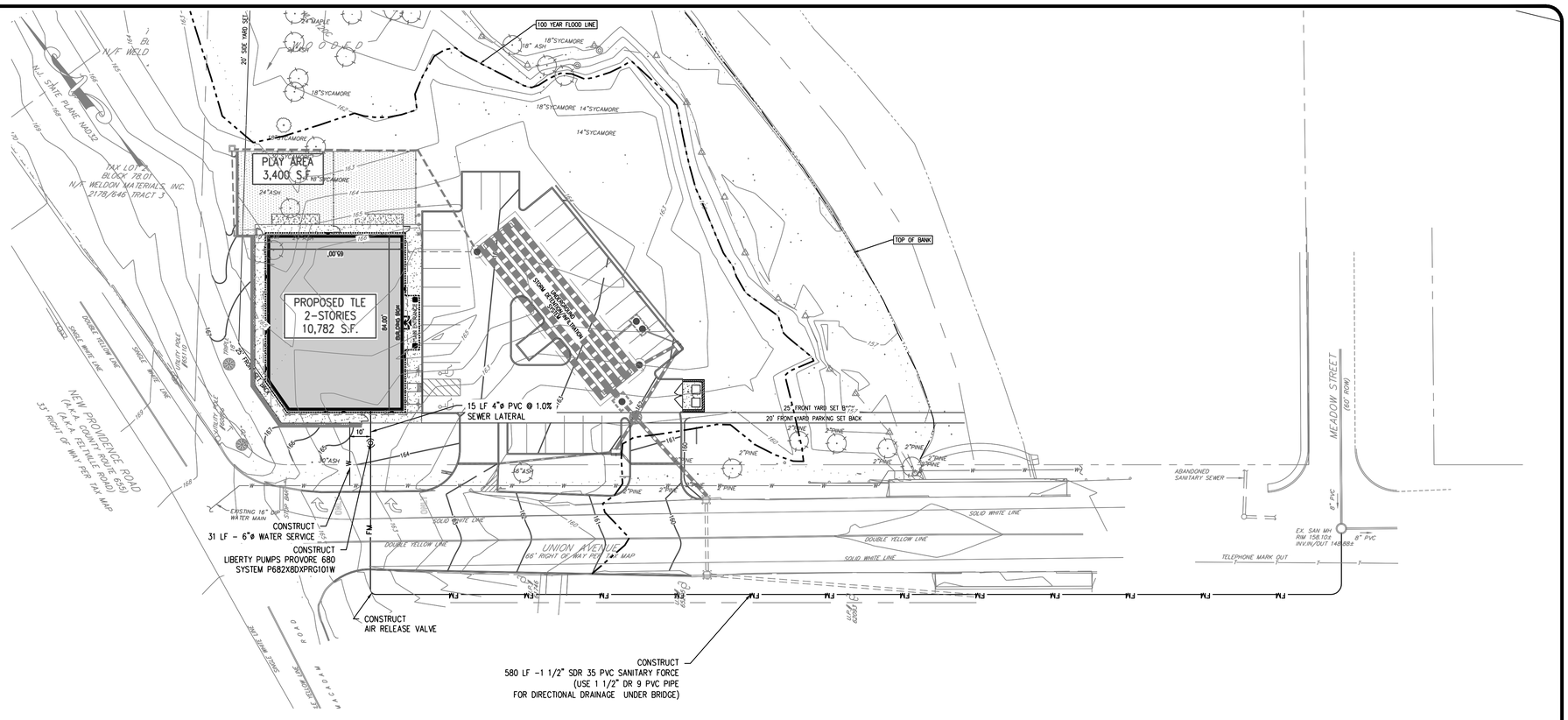


# SANITARY SEWER PLAN

SCALE: 1"=30'

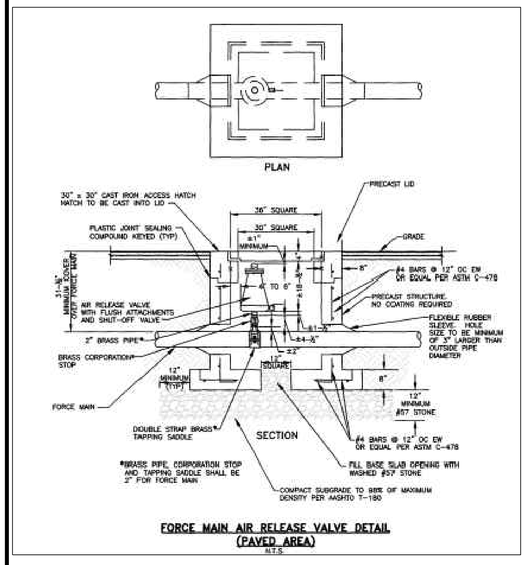


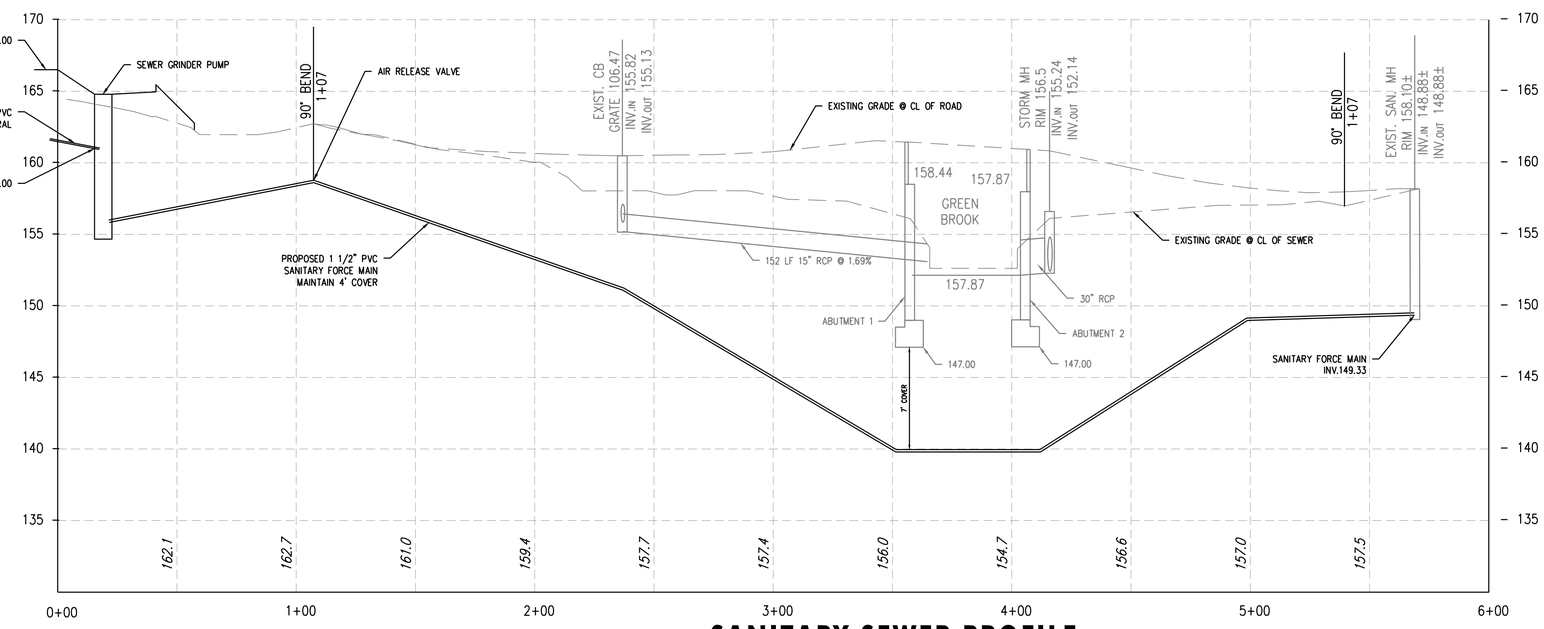


# SANITARY SEWER PROFILE

SCALE: HOR. 1"=30'
VER. 1"=5'


Jarmel Kizel
ARCHITECTS AND ENGINEERS INC.
42 OKNER PARKWAY
LIVINGSTON, NEW JERSEY 07039
TEL: 973-994-9669
FAX: 973-994-4069
www.jarmelkizel.com


Architecture
Engineering
Interior Design
Implementation Services

ISSUE

| NO. | DATE | DESCRIPTION | INT. |
|---|---|---|---|
| 1. | 6.13.19 | COMPLETENESS REVIEW | GPG |
| 2. | 10.31.19 | PLANNING BOARD SUBMISSION | GPG |
| 3. | 12.02.19 | P.B. RE-SUBMISSION | GPG |
| 4. | 3.04.20 | P.B. RE-SUBMISSION | GPG |
| 5. | 9.04.20 | FOR 9.15.20 P.B. HEARING | GPG |

REVISION

| NO. | DATE | DESCRIPTION | INT. |
|---|---|---|---|
| 1. | 10.31.19 | PER NJDEP & TECH. REVIEW #1 | GPG |
| 2. | 12.02.19 | REVISED BUILDING LOCATION | APP |
| 3. | 8.31.20 | REV WETLAND LINE & GRADING | GPG |


**PRINCIPALS**
**MATTHEW B. JARMEL, AIA, MBA** NJ LIC AI0-12787; AZ LIC 48159; MN LIC 46404; CO LIC ARC-401483; NC LIC 10120; CT LIC ARI0011415; NH LIC 3501; DC LIC ARC101849; NY LIC 024673; DE LIC SS-0007256; OH LIC A-99-12444; FL LIC AR98965; PA LIC RA-014851-B; GA LIC AR011484; RI LIC ARC.0004765; IA LIC 05577; SC LIC AR.9163; IL LIC 001-020069; TN LIC 103850; MA LIC AR10286; TX LIC 20992; MD LIC 12662; VA LIC 0401 014089; WI LIC 1501052189; VT LIC 2453
**IRWIN H. KIZEL, AIA, PP** NJ LIC 21AI00794700; CT LIC 08525; NJ PP LIC 33U00243100
**RICHARD A. JARMEL, PE** CT LIC PEN0027735; NJ LIC 37491; FL LIC 82149; MN LIC 47482; MI LIC 6201052339; NY LIC 073898-1; DE LIC 18754; PA LIC PE070600; VT LIC 18754; MA LIC 50445; TX LIC 123822
**ASSOCIATES**
**RONALD A. BROKENSHIRE, PE** NJ LIC GE45511; CT LIC PEN.0022811; PA LIC 085657
**DAVID L. LESSING, RA** NJ LIC AI 13231; CT LIC AR-0011748; NY LIC 024719; MA LIC 31425; PA LIC RA-405081
**MICHAEL J. VORLAND, RA** NY LIC 036993
**GERARD P. GESARIO, PE** NJ LIC GE038255
**FREDERICK KINCAID, RA** NJ LIC 21AI01810294
**JEROME LESLIE EBEN, FAIA, PP** NJ LIC AI 03853; NY LIC 019152; PA LIC 0401 012073; IL LIC 001-017694
**CHERYL SCHWEIKER, AIA** NJ LIC 21AI00269000; PA LIC RA407927
NJ State Board Of Architects Authorization No. 1
NJ State Board Of Engineers & Land Surveyors Authorization No. 24GA28053000


Project: **THE LEARNING EXPERIENCE**
**PRELIMINARY AND FINAL SITE PLAN**
**100 UNION AVENUE**
**BLOCK 78.01, LOT 1, TAX SHEET # 22**
**BOROUGH OF WATCHUNG**
**COUNTY OF SOMERSET, STATE OF NEW JERSEY**

| Project No: | Scale: |
|---|---|
| TLENJ-S-18-295 | AS NOTED |
| Drawn By: A.P.P. | Approved By: G.P.G. |

Drawing Name:
**SANITARY SEWER PLAN & SANITARY SEWER PROFILE**

Drawing Number: **C-550**

Sheet No: 8 of: 17

Initial Date: MAY 30, 2019

GERARD P. GESARIO
PROFESSIONAL ENGINEER
N.J. LIC. #GE038255

S:\PROJECTS\TLENJ-S-18-295 TLE WATCHUNG UNION AVENUE\CAD\18-295 C-550 SEWER.DWG GGESARIO PLOTTED: 09/02/2020

SURVEY REFERENCE:

1. BOUNDARY & TOPOGRAPHY INFORMATION IS BASED ON A SURVEY TITLED "BOUNDARY AND TOPOGRAPHIC SURVEY, TAX LOT 1 - BLOCK 78.01, BOROUGH OF WATCHUNG, COUNTY OF SOMERSET, NEW JERSEY" BY KSS, KENNON SURVEY SERVICES INC., OF WARREN NEW JERSEY, DATED 6/5/19.

LANDSCAPING NOTES:

1. NAMES OF PLANTS AS DESCRIBED ON THIS PLAN CONFORM TO THOSE GIVEN IN "STANDARDIZED PLANT NAMES," 1942 EDITION, PREPARED BY THE AMERICAN JOINT COMMITTEE ON HORTICULTURAL NOMENCLATURE. NAMES OF PLANT VARIETIES NOT INCLUDED HEREIN CONFORM TO NAMES GENERALLY ACCEPTED IN NURSERY TRADE.
2. ALL PLANTS SHALL BE DUG, PACKED, TRANSPORTED AND HANDLED WITH THE UTMOST CARE TO ENSURE ADEQUATE PROTECTION FROM INJURY AND DESICCATION.
3. ALL PLANS SHALL BE PRUNED TO ENSURE VIGOR PRIOR TO OR UPON INSTALLATION, WHILE RETAINING THE NATURAL HABIT OF THE PLANTS. THE CENTRAL LEADER SHALL NOT BE CUT. DAMAGED, BROKEN OR CONFLICTING BRANCHES SHALL BE PRUNED CLEANLY FLUSH WITH THE TRUNK OR BRANCH.
4. BACKFILL MATERIAL FOR PLANTING PITS SHALL BE COMPOSED OF 1 PART PEAT MOSS, 1 PART HUMUS AND 1 PART TOPSOIL FROM THE SITE OR SELECT TOPSOIL. TOPSOIL SHALL BE FREE OF ACIDIC MARL, STICKS, LARGE STONES, DEBRIS OR OTHER OBJECTIONABLE MATERIAL.
5. A COMPLETE LIST OF PLANTS, INCLUDING A SCHEDULE OF QUANTITIES, SIZES AND OTHER REQUIREMENTS IS SHOWN ON THE SCHEDULE OF PLANT MATERIAL. IN THE EVENT THAT DISCREPANCIES OCCUR BETWEEN THE QUANTITIES OF PLANTS INDICATED IN THE LIST AND THOSE ON THE PLAN, THE PLANT QUANTITIES ON THE PLAN SHALL GOVERN.
6. AFTER COMPLETION OF A PROJECT, ALL EXPOSED GROUND SURFACES THAT ARE NOT PAVED WITHIN A SUBDIVISION OR LAND DEVELOPMENT, AND THAT ARE NOT COVERED BY LANDSCAPE PLANTING OR SEEDING AS SPECIFIED, SHALL BE COVERED WITH A NATURAL MULCH THAT WILL PREVENT SOIL EROSION AND THE EMANATION OF DUST.
7. NO PLANT SHALL BE PUT IN THE GROUND BEFORE ROUGH GRADING HAS BEEN COMPLETED AND APPROVED BY THE ENGINEER.
8. STANDARDS FOR TYPE, SPREAD, HEIGHT, ROOT BALL AND QUALITY OF NEW PLANT MATERIAL SHALL BE IN ACCORDANCE WITH GUIDELINES AS SET FORTH IN THE "AMERICAN STANDARD FOR NURSERY STOCK," PUBLISHED BY THE AMERICAN ASSOCIATION OF NURSERYMEN. PLANT MATERIAL SHALL HAVE NORMAL HABIT OF GROWTH AND BE HEALTHY, VIGOROUS AND FREE FROM DISEASES AND INSECT INFESTATION.
9. NEW PLANT MATERIAL SHALL BE NURSERY GROWN UNLESS SPECIFIED OTHERWISE. ALL PLANTS SHALL BE SET PLUMB AND SHALL BEAR THE SAME RELATIONSHIP TO FINISHED GRADE AS THE PLANTS ORIGINAL GRADE BEFORE DIGGING.
10. THE CONTRACTOR SHALL VERIFY THE LOCATION OF ALL EXISTING UNDERGROUND UTILITY AND SEWER LINES PRIOR TO THE START OF EXCAVATION ACTIVITIES. NOTIFY THE ENGINEER AND OWNER IMMEDIATELY OF ANY CONFLICTS WITH PROPOSED PLANTING LOCATIONS. THE CONTRACTOR SHALL BE RESPONSIBLE FOR ANY DAMAGE.
11. SHADE AND EVERGREEN PLANTS SHALL BE FIELD ADJUSTED TO BE PLANTED AT LEAST 2 (TWO) FEET FROM ANY CURBING, PAVING OR SIDEWALK. WHENEVER POSSIBLE, THIS DIMENSION SHALL BE ADJUSTED TO 4 (FOUR) FEET. THE ENGINEER AND/OR OWNER SHALL ASSIST THE CONTRACTOR IN THE FINAL PLACEMENT OF ALL PLANT MATERIAL AND LOCATION OF PLANTING BEDS TO ENSURE COMPLIANCE WITH DESIGN INTENT UNLESS OTHERWISE INSTRUCTED.
12. THE CONTRACTOR SHALL NOT MAKE SUBSTITUTIONS. IF THE SPECIFIED LANDSCAPE MATERIAL IS NOT OBTAINABLE, SUBSTITUTIONS MUST BE APPROVED BY THE TOWNSHIP. THE CONTRACTOR SHALL SUBMIT PROOF OF NON-AVAILABILITY TO THE ENGINEER AND TOWNSHIP, TOGETHER WITH A PROPOSAL FOR USE OF AN EQUIVALENT MATERIAL.
13. THE ENGINEER MAY REVIEW PLANT MATERIALS AT THE SITE BEFORE PLANTING, FOR COMPLIANCE WITH REQUIREMENTS FOR GENUS, SPECIES, VARIETY, SIZE AND QUALITY. THE ENGINEER RETAINS THE RIGHT TO FURTHER REVIEW PLANT MATERIALS FOR SIZE AND CONDITION OF BALLS AND ROOT SYSTEM, INSECTS, INJURIES AND LATENT DEFECTS, AND TO REJECT UNSATISFACTORY OR DEFECTIVE MATERIAL AT ANY TIME DURING THE PROGRESS OF WORK. THE CONTRACTOR SHALL REMOVE REJECTED PLANT MATERIALS IMMEDIATELY FROM THE PROJECT SITE AS DIRECTED BY THE LANDSCAPE ARCHITECT OR OWNER.
14. ALL PLANT MATERIAL SHALL BE INSTALLED AS PER DETAILS, NOTES AND CONTRACT DOCUMENTS. THE ENGINEER MAY REVIEW INSTALLATION AND MAINTENANCE PROCEDURES.
15. NEW PLANT MATERIAL SHALL BE GUARANTEED TO BE ALIVE AND IN VIGOROUS GROWING CONDITION FOR A PERIOD OF TWO YEARS FOLLOWING ACCEPTANCE BY THE TOWNSHIP. PLANT MATERIAL FOUND TO BE UNHEALTHY, DYING OR DEAD DURING THIS PERIOD, SHALL BE REMOVED AND REPLACED IN KIND BY THE CONTRACTOR AT NO EXPENSE TO THE OWNER.
16. THE CONTRACTOR SHALL KEEP AREA CLEAN DURING DELIVERY AND INSTALLATION OF PLANT MATERIALS. REMOVE AND DISPOSE OF OFF-SITE ANY ACCUMULATED DEBRIS OR UNUSED MATERIALS. REPAIR DAMAGE TO ADJACENT AREAS CAUSED BY LANDSCAPE INSTALLATION OPERATIONS.
17. PLANTING OPERATIONS SHALL BE PERFORMED DURING PERIODS WITHIN THE PLANTING SEASON WHEN WEATHER AND SOIL CONDITIONS ARE SUITABLE AND IN ACCORDANCE WITH ACCEPTABLE LOCAL PRACTICE. TREES AND SHRUBS SHOULD BE INSTALLED DURING THE FOLLOWING FALL AND SPRING SEASONS WITH THE EXCEPTION OF TREES WHICH EXPERIENCE A FALL PLANTING HAZARD AND SHOULD ONLY BE PLANTED IN THE SPRING:
    - 17.1. FALL: AUGUST 15 - DECEMBER 15 - EVERGREEN TREES
    - 17.2. OCTOBER 15 - DECEMBER 15 - DECIDUOUS TREES
    - 17.3. SPRING: MARCH 1 - MAY 15 - ALL PLANTS

CONTRACTOR SHALL PROVIDE SPEC IRRIGATION SYSTEM FOR LANDSCAPE AREAS.

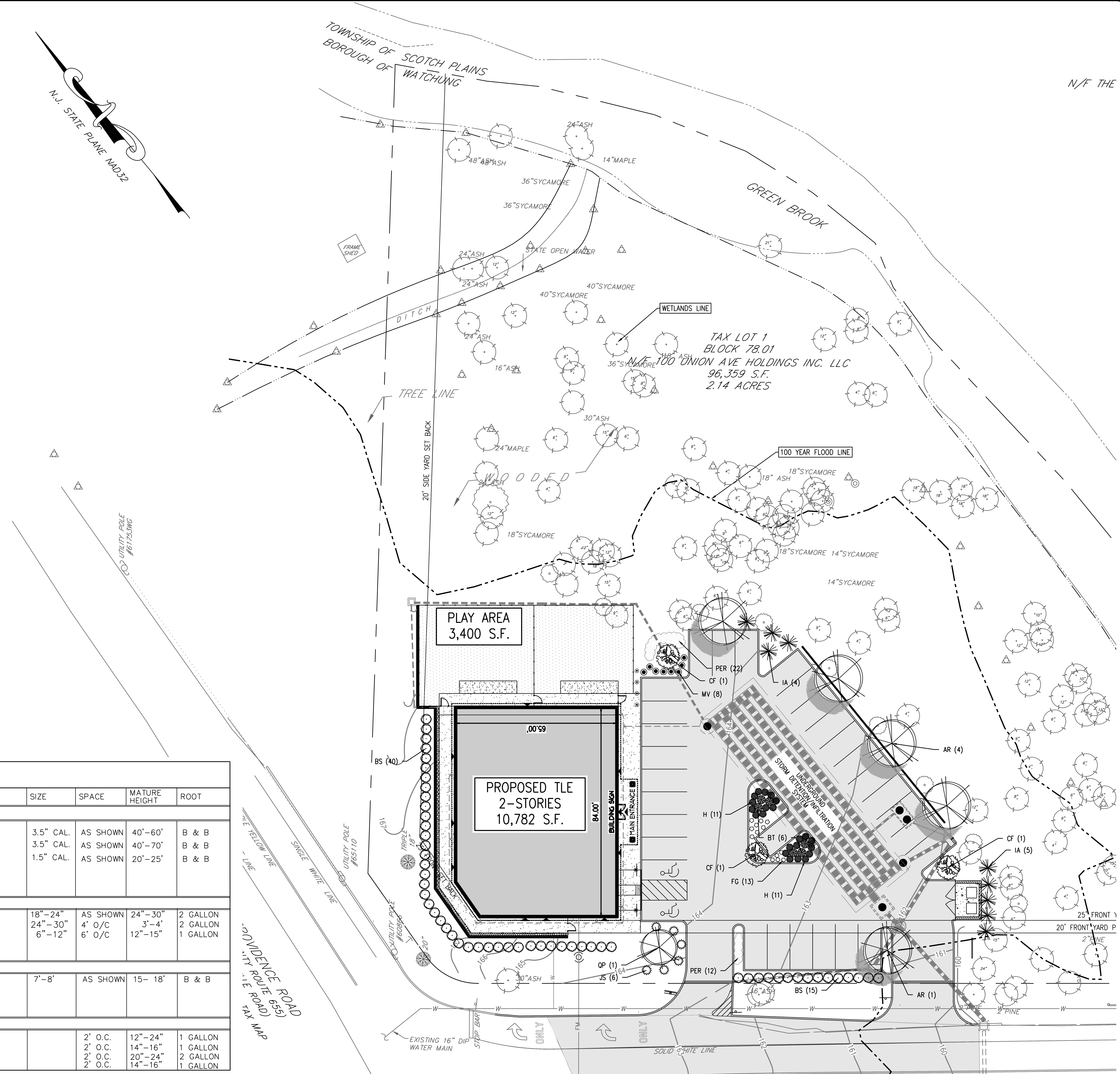


**LANDSCAPE PLAN**

**SCALE: 1"=20'**

# PLANT SCHEDULE

| KEY | QTY. | BOTANICAL NAME | COMMON NAME | SIZE | SPACE | MATURE HEIGHT | ROOT |
|---|---|---|---|---|---|---|---|
| SHADE/FLOWERING TREE(S) | | | | | | | |
| AR | 5 | ACER RUBRUM | OCTOBER GLORY RED MAPLE | 3.5" CAL. | AS SHOWN | 40'-60' | B & B |
| QP | 1 | QUERCUS PALUSTRIS | PIN OAK | 3.5" CAL. | AS SHOWN | 40'-70' | B & B |
| CF | 3 | CORNUS FLORIDA | FLOWERING DOGWOOD | 1.5" CAL. | AS SHOWN | 20'-25' | B & B |
| SHRUB(S) | | | | | | | |
| BT | 6 | BERBERIS THUNBERGI 'CRIMSON PTGMY' | DWARF JAPANESE BARBERRY | 18"-24" | AS SHOWN | 24"-30" | 2 GALLON |
| BS | 55 | BUXUS MICROPHYLLA | GREEN VELVET BOXWOOD | 24"-30" | 4' O/C | 3'-4' | 2 GALLON |
| JS | 6 | JUNIPERUS CHINENSIS 'SARGENTI' | SARGENT'S JUNIPER | 6"-12" | 6' O/C | 12"-15" | 1 GALLON |
| EVERGREEN TREE(S) | | | | | | | |
| IA | 9 | ILEX AQUIPERNYI 'DRAGON LADY' | DRAGON LADY HOLLY | 7'-8' | AS SHOWN | 15- 18' | B & B |
| PERRENNIAL(S) | | | | | | | |
| MV | 8 | MERTENSIA VIRGINICA | VIRGINIA BLUEBELLS | | 2' O.C. | 12"-24" | 1 GALLON |
| H | 22 | HOSTA X 'FIRE AND ICE' | FIRE AND ICE PLANTAIN LILY | | 2' O.C. | 14"-16" | 1 GALLON |
| PER | 34 | PEROVSIKA 'LITTLE SPIRE' | LITTLE SPIRE RUSSIAN SAGE | | 2' O.C. | 20"-24" | 2 GALLON |
| FG | 13 | FESTUCA GLAUCA | BLUE FESCUE | | 2' O.C. | 14"-16" | 1 GALLON |

NOTE: IF ANY DISCREPENCIES OCCUR BETWEEN AMOUNTS SHOWN IN THE PLAN AND THE PLANT LIST, THE PLAN SHALL DICTATE.
ALL TREES SHALL BE BALLED AND BURLAPPED (B & B).
SHADE TREES TO BE BRANCHED AT 7 FEET.

S:\PROJECTS\TLENJ-S-18-295 TLE WATCHUNG UNION AVENUE\CAD\18-295 C-600 LANDSCAPE.DWG GGESARIO PLOTTED: 09/02/2020


Jarmel **Kizel**
ARCHITECTS AND ENGINEERS INC.
42 OKNER PARKWAY
LIVINGSTON, NEW JERSEY 07039
TEL: 973-994-9669
FAX: 973-994-4069
www.jarmelkizel.com

Architecture
Engineering
Interior Design
Implementation Services


ISSUE

| NO. | DATE | DESCRIPTION | INT. |
|---|---|---|---|
| 1. | 6.13.19 | COMPLETENESS REVIEW | GPG |
| 2. | 10.31.19 | PLANNING BOARD SUBMISSION | GPG |
| 3. | 12.02.19 | P.B. RE-SUBMISSION | GPG |
| 4. | 3.04.20 | P.B. RE-SUBMISSION | GPG |
| 5. | 9.04.20 | FOR 9.15.20 P.B. HEARING | GPG |

REVISION

| NO. | DATE | DESCRIPTION | INT. |
|---|---|---|---|
| 1. | 10.31.19 | PER NJDEP & TECH. REVIEW #1 | GPG |
| 2. | 12.02.19 | REVISED BUILDING LOCATION | APP |
| 3. | 8.31.20 | REV WETLAND LINE & GRADING | GPG |


**PRINCIPALS**

**MATTHEW B. JARMEL, AIA, MBA** NJ LIC AI0-12787
AZ LIC 48159; CO LIC ARC-401483; CT LIC ARI.0011415; DC LIC ARC101849; DE LIC S5-0007256; FL LIC AR98965; GA LIC RA011484; IA LIC 05577; IL LIC 001.020069; MA LIC AR10286; MD LIC 12662; MI LIC 1301052189
MN LIC 46404; NC LIC 10120; NH LIC 3501; NY LIC 024673; OH LIC A-99-12444; PA LIC RA-014851-B; RI LIC ARC.0004765; SC LIC AR.9163; TN LIC 103850; TX LIC 20992; VA LIC 0401 014089; VT LIC 2453

**IRWIN H. KIZEL, AIA, PP** NJ LIC 21AI00794700
CT LIC 08522; NJ PP LIC 33LI00243100

**RICHARD A. JARMEL, PE** NJ LIC 37491
CT LIC PEN0027735; FL LIC 83149; MI LIC 6201052339; DE LIC 18754; VT LIC 88498
MN LIC 47482; NY LIC 073898-1; PA LIC PE070600; MA LIC 50445; TX LIC 123822

**ASSOCIATES**

**RONALD A. BROKENSHIRE, PE** NJ LIC GE45511
CT LIC PEN.0032811; PA LIC PE085817

**DAVID L. LESESNE, RA** NJ LIC AI 13231
CT LIC ARI-0011748; MA LIC 31425; NY LIC 024719; PA LIC RA-405081

**MICHAEL J. VORLAND, RA** NY LIC 036993

**GERARD P. GESARIO, PE** NJ LIC GE038255

**FREDERICK KINCAID, RA** NJ LIC 21A1018294

**JEROME LESLIE EBEN, FAIA, PP** NJ LIC AI 8883
PA LIC 016502-B; VA LIC 0401 012073; NY LIC 019151; IL LIC 001 017694

**CHERYL SCHWEIKER, AIA** NJ LIC 21AI02069000
PA LIC RA407927

NJ State Board Of Architects Authorization No. 161
NJ State Board Of Engineers & Land Surveyors Authorization No. 24GA28053000


Project: **THE LEARNING EXPERIENCE**
**PRELIMINARY AND FINAL SITE PLAN**
**100 UNION AVENUE**
**BLOCK 78.01, LOT 1, TAX SHEET # 22**
**BOROUGH OF WATCHUNG**
**COUNTY OF SOMERSET, STATE OF NEW JERSEY**

| Project No: | Scale: |
|---|---|
| TLENJ-S-18-295 | 1" = 20' |
| Drawn By: A.P.P. | Approved By: G.P.G. |

Drawing Name: **LANDSCAPE PLAN**

Drawing Number: **C-600**

Sheet No: 9 of: 17

Initial Date: **MAY 30, 2019**

**GERARD P. GESARIO**
**PROFESSIONAL ENGINEER**
**N.J. LIC. #GE038255**

SURVEY REFERENCE:

1. BOUNDARY & TOPOGRAPHY INFORMATION IS BASED ON A SURVEY TITLED "BOUNDARY AND TOPOGRAPHIC SURVEY, TAX LOT 1 – BLOCK 78.01, BOROUGH OF WATCHUNG, COUNTY OF SOMERSET, NEW JERSEY" BY KSS, KENNON SURVEY SERVICES INC., OF WARREN NEW JERSEY, DATED 6/5/19.

HOLOPHANE
LEADER IN LIGHTING SOLUTIONS

| Catalog Number | |
|---|---|
| Notes | Type |

## HLWPC2
Wallpack® Full Cutoff LED

**Mechanical**
- Heavy grade A360 cast aluminum (aluminum with <1% copper)
- Exterior parts are protected by a zinc-infused Super Durable TGIC thermoset powder coat finish that provides superior resistance to corrosion and weathering
- Mounts to a standard junction box
- Swivel kit for pendant mount applications mounts to 4" square electrical box
- Wet location listed
- IP65 rated housing, down light only
- ¾" painted threaded entry(¾" - 14 NPT) on each side and on top, accepts ¾" and ½" condiut
- ¾" threaded plugs are painted on each side
- Vibe rating for surface mount: 3G
- Vibe rating for pendant mount: 3G at 1.5', excludes swivel kit
- Bird shroud for pendant mount

**Electrical**
- Certified by UL or CSA
- Rated for -40°C (-40°F) minimum ambient
- A programmable electronic driver with 0-10V control leads
- Available in: 120-277V 50/60 Hz and 347-480V 50/60 Hz,
- Standard LEDs shall have a minimum of 70 CRI available in 3000K, 4000K and 5000K CCT
- Optional LEDs shall have a minimum of 80 CRI available in 3000K, 4000K and 5000K CCT
- Amber LED option shall limited wavelength amber and no phosphor corrected amber (8 week lead-time)
- Internally mounted emergency battery backup for operation in an ambient temperature ranging from -20°C (-4°F) to 30°C (86°F), available with P10 thru P40 performance packages, non CEC compliant
- The electrical system for a single circuit shall be designed to meets ANSI/IEEE C62.41.2 and includes a 20kV/10kA (standard) with an optional 10kV/5kA surge protection

**Optical**
The light engine housing is IP66 rated. The acrylic optical system consist of the following I.E.S. distributions:
- Typ V: E (entry), M (medium), R (rectangle) & W (wide)
- Asymmetric

**Controls**
- Field adjustable output (AO)
- Button style photocontrol (PE)
- Motion sensor & ambient photocontrol combination for mounting low (8-15') (MASL) and high (15-30') (MASH) mounting heights

**Certification and Standards**
- Luminaire shall be UL or CSA listed per CSA luminaire standard CSA
- Suitable for operation in an ambient temperature up to 40°C/104°F per UL or CSA certification
- Design lights Consortium® (DLC) qualified product. Not all versions of this product may be DLC qualified. Please check the DLC Qualified Products List at www.designlights.org/QPL to confirm which versions are qualified.
- LM-79 compliant
- The projected LED Lumen Maintenance shall be based only on IES LM-80-08 and TM-21

**Warranty**
5-year limited warranty. Complete warranty terms located at: www.acuitybrands.com/CustomerResources/Terms_and_Conditions.aspx.

**Note:** Actual performance may differ as a result of end-user environment and application.
All values are design or typical values, measured under laboratory conditions at 25 °C.
Specifications subject to change without notice.

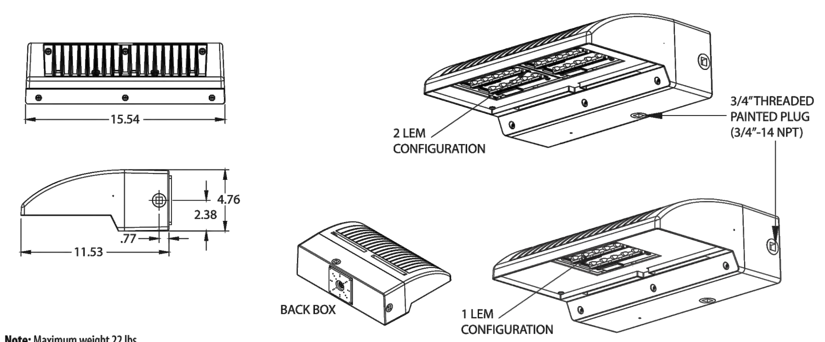


**Note:** Maximum weight 22 lbs.

AcuityBrands. | Holophane | 3825 Columbus Rd., Granville, OH 43023 | Phone: 866-HOLOPHANE | www.holophane.com
© 2014-2018 Acuity Brands Lighting, Inc. All rights reserved. Rev. 05/01/19 Specifications are subject to change without notice.
HLWPC2
Page 1 of 8

## Autobahn Series ATB2
**Roadway Lighting**

DLC QPL LISTED | NIGHTTIME FRIENDLY | Consistent with LEED® goals & Green Globes™ criteria for light pollution reduction

**PRODUCT OVERVIEW**

**Applications:**
Roadways
Off ramps
Residential streets
Parking lots

**DIMENSIONS**

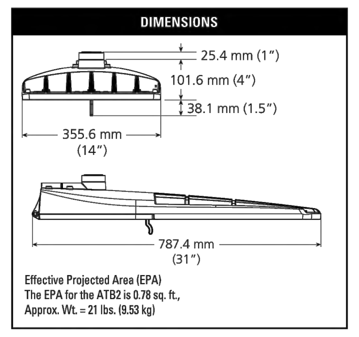


Effective Projected Area (EPA)
The EPA for the ATB2 is 0.78 sq. ft.,
Approx. Wt. = 21 lbs. (9.53 kg)

**STANDARDS**

DesignLights Consortium® (DLC) qualified product. Not all versions of this product may be DLC qualified. Please check the DLC Qualified Products List at www.designlights.org/QPL to confirm which versions are qualified.

Color temperatures of ≤ 3000K must be specified for International Dark-Sky Association certification.

Rated for -40°C to 40°C ambient.
CSA Certified to U.S. and Canadian standards
Complies with ANSI: C136.2, C136.10, C136.14, C136.31, C136.15, C136.37

**Features:**

**OPTICAL**

Same Light: Performance is comparable to 250-400W HPS roadway luminaires.

White Light: Correlated color temperature - 4000K, 70 CRI minimum, 3000K, 70CRI minimum or optional 5000K, 70 CRI minimum.

Unique IP66 rated LED light engines provided 0% uplight and restrict backlight to within sidewalk depth, providing optimal application coverage and optimal pole spacing.

Available in Type II, III, IV, & V roadway distributions.

**ELECTRICAL**

Expected Life: LED light engines are rated >100,000 hours at 25°C, L70. Electronic driver has an expected life of 100,000 hours at a 25°C ambient.

Lower Energy: Saves an average of 40-60% over comparable HPS platforms.

Robust Surge Protection: Three different surge protection options provide a minimum of ANSI C136.2 10kV/5kA protection. 20kV/10kA protection is also available.

**MECHANICAL**

Easy to Maintain: Includes standard AEL lineman-friendly features such as tool-less entry, 3 station terminal block and quick disconnects. Bubble level located inside the electrical compartment for easy leveling at installation.

Rugged die-cast aluminum housing is polyester powder-coated for durability and corrosion resistance. Rigorous five-stage pre-treating and painting process yields a finish that achieves a scribe creepage rating of 7 (per ASTM D1654) after over 5000 hours exposure to salt fog chamber (operated per ASTM B117).

Four-bolt mast arm mount is adjustable for arms from 1-1/4" to 2" (1-5/8" to 2-3/8" O.D.) diameter and provides a 3G vibration rating per ANSI C136.

Wildlife shield is cast into the housing (not a separate piece).

**CONTROLS**

NEMA 3 Pin photocontrol receptacle is standard, with the Acuity designed ANSI 7 Pin receptacle optionally available.

Premium solid state locking sale photocontrol - PCSS (10 year rated life). Extreme long life sold state locking style photocontrol - PCLL (20 year rated life).

Mulit-level dimming available to provide scheduled dimming as specified by the customer.

Optional onboard Adjustable Output module allows the light output and input wattage to be modified to meet site specific requirements, and can also allow a single fixture to be flexibly applied in many different applications.

Note: Specifications subject to change without notice.
Autobahn Series – AEL_0109_ATB2

AEL American Electric Lighting

Statistics

| Description | Symbol | Avg | Max | Min | Max/Min | Avg/Min |
|---|---|---|---|---|---|---|
| Entire Calc Area | + | 1.0 fc | 9.0 fc | 0.0 fc | N/A | N/A |
| Parking Area | □ | 3.0 fc | 5.6 fc | 0.6 fc | 9.3:1 | 5.0:1 |
| Play Area | ◇ | 2.7 fc | 5.6 fc | 1.3 fc | 4.3:1 | 2.1:1 |

Schedule

| Symbol | Label | QTY | Catalog Number | Description | Lamp | Number Lamps | Lumens per Lamp | LLF | Wattage |
|---|---|---|---|---|---|---|---|---|---|
| | B | 10 | HLWPC2 P10 40K XX T2M | Wallpack Full Cutoff LED, LED Performance Package P10, 4000 series CCT, Voltage, Type II Medium | LED | 1 | 3110 | 0.9 | 28 |
| | C | 1 | ATB2 60BLEDE10 XXXXX R5 4K/5K | ATB2 SERIES LED 1000MA TYPE 5 4000K/5000K CCT | LED Array | 1 | 26127 | 0.9 | 408 |
| | D | 1 | ATB2 40BLEDE15 XXXXX R4 4K/5K | ATB2 SERIES LED 1500MA TYPE 4 4000K/5000K CCT | LED Array | 1 | 21798 | 0.9 | 198 |

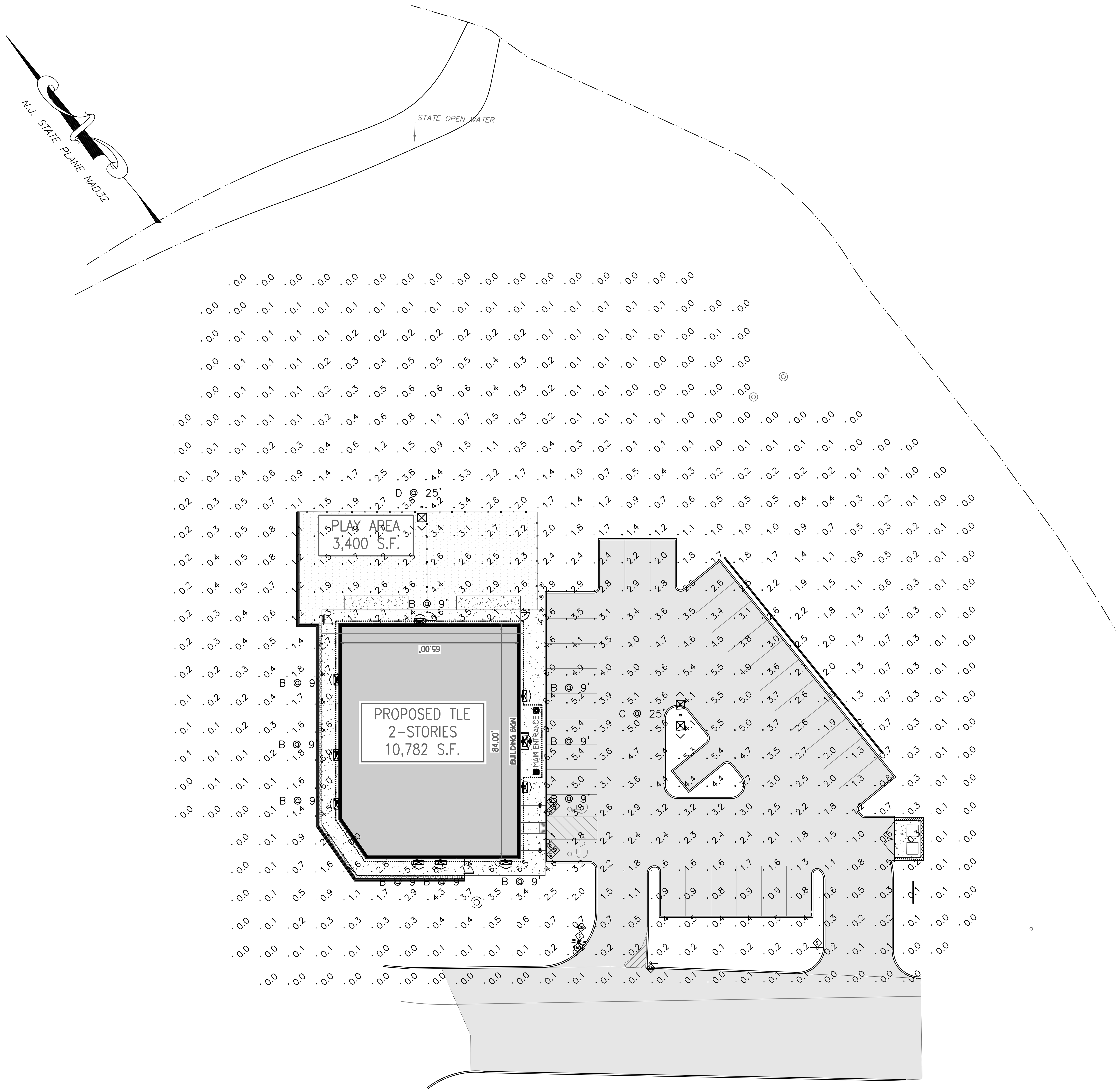


NOTE:
1. SITE LIGHTING TO BE TURNED OFF 1 HOUR AFTER CLOSE OF BUSINESS.
2. POLE FIXTURES TO BE MOUNTED AT 25 FEET.
3. BUILDING FIXTURES TO BE MOUNTED AT 9 FEET.

# LIGHTING PLAN
SCALE: 1"=20'

0 10 20 40

S:\PROJECTS\TLENJ-S-18-295 TLE WATCHUNG UNION AVENUE\CAD\18-295 C-700 LIGHTING.DWG GGESARIO PLOTTED: 09/02/2020


Jarmel Kizel
ARCHITECTS AND ENGINEERS INC.
42 OKNER PARKWAY
LIVINGSTON, NEW JERSEY 07039
TEL: 973-994-9669
FAX: 973-994-4069
www.jarmelkizel.com

Architecture
Engineering
Interior Design
Implementation Services


ISSUE

| NO. | DATE | DESCRIPTION | INT. |
|---|---|---|---|
| 1. | 6.13.19 | COMPLETENESS REVIEW | GPG |
| 2. | 10.31.19 | PLANNING BOARD SUBMISSION | GPG |
| 3. | 12.02.19 | P.B. RE-SUBMISSION | GPG |
| 4. | 3.04.20 | P.B. RE-SUBMISSION | GPG |
| 5. | 9.04.20 | FOR 9.15.20 P.B. HEARING | GPG |

REVISION

| NO. | DATE | DESCRIPTION | INT. |
|---|---|---|---|
| 1. | 10.31.19 | PER NJDEP & TECH. REVIEW #1 | GPG |
| 2. | 12.02.19 | REVISED BUILDING LOCATION | APP |
| 3. | 8.31.20 | REV WETLAND LINE & GRADING | GPG |


**PRINCIPALS**
**MATTHEW B. JARMEL, AIA, MBA** — NJ LIC AI0-12787; AZ LIC 48159; CO LIC ARC-401483; CT LIC ARI.0011415; DC LIC ARC101849; DE LIC S5-0007256; FL LIC AR98965; GA LIC RA011484; IA LIC 05577; IL LIC 001.020069; MA LIC AR10286; MD LIC 12662; MI LIC 1301052189; MN LIC 46404; NC LIC 10120; NH LIC 3501; NY LIC 024673; OH LIC A-99-12444; PA LIC RA-014851-B; RI LIC ARC.0004765; SC LIC AR.9163; TN LIC 103850; TX LIC 20992; VA LIC 0401 014089; VT LIC 2453
**IRWIN H. KIZEL, AIA, PP** — CT LIC 08522; NJ LIC 21AI00794700; NJ PP LIC 33LI00243100
**RICHARD A. JARMEL, PE** — CT LIC PEN0027735; FL LIC 83149; MI LIC 6201052339; DE LIC 18754; VT LIC 88498; NJ LIC 37491; MN LIC 47482; NY LIC 073898-1; PA LIC PE070600; MA LIC 50445; TX LIC 123822
**ASSOCIATES**
**RONALD A. BROKENSHIRE, PE** — CT LIC PEN.0032811; NJ LIC GE45511; PA LIC PE085817
**DAVID L. LESESNE, RA** — CT LIC ARI-0011748; MA LIC 31425; NJ LIC AI 13231; NY LIC 024719; PA LIC RA-405081
**MICHAEL J. VORLAND, RA** — NY LIC 036993
**GERARD P. GESARIO, PE** — NJ LIC GE038255
**FREDERICK KINCAID, RA** — NJ LIC 21A1018294
**JEROME LESLIE EBEN, FAIA, PP** — PA LIC 016502-B; VA LIC 0401 012073; NJ LIC AI 8883; NY LIC 019151; IL LIC 001 017694
**CHERYL SCHWEIKER, AIA** — NJ LIC 21AI02069000; PA LIC RA407927
NJ State Board Of Architects Authorization No. 161
NJ State Board Of Engineers & Land Surveyors Authorization No. 24GA28053000


Project: **THE LEARNING EXPERIENCE**
**PRELIMINARY AND FINAL SITE PLAN**
**100 UNION AVENUE**
**BLOCK 78.01, LOT 1, TAX SHEET # 22**
**BOROUGH OF WATCHUNG**
**COUNTY OF SOMERSET, STATE OF NEW JERSEY**

| Project No: TLENJ-S-18-295 | Scale: 1" = 20' |
|---|---|
| Drawn By: A.P.P. | Approved By: G.P.G. |

Drawing Name:
**LIGHTING PLAN AND DETAILS**

| Drawing Number: C-700 | |
|---|---|
| Sheet No: 10 of: 17 | |
| Initial Date: MAY 30, 2019 | GERARD P. GESARIO PROFESSIONAL ENGINEER N.J. LIC. #GE038255 |

SURVEY REFERENCE:

1. BOUNDARY & TOPOGRAPHY INFORMATION IS BASED ON A SURVEY TITLED "BOUNDARY AND TOPOGRAPHIC SURVEY, TAX LOT 1 – BLOCK 78.01, BOROUGH OF WATCHUNG, COUNTY OF SOMERSET, NEW JERSEY" BY KSS, KENNON SURVEY SERVICES INC., OF WARREN NEW JERSEY, DATED 6/5/19.

SOIL EROSION AND SEDIMENT CONTROL NOTES

1. The Somerset–Union Soil Conservation District shall be notified in writing 48 hours in advance of any land disturbing activity.
2. All Soil Erosion and Sediment Control practices shall be installed prior to any major soil disturbances, or in their proper sequence and maintained until permanent protection is established.
3. Any Disturbed areas that will be left exposed more than 30 Days and not subject to construction traffic, will immediately receive a temporary seeding. If the season prevents the establishment of a temporary cover, the disturbed areas will be mulched with straw, or equivalent material, at a rate of two (2) tons per acre, according to NJ State Standards.
4. Permanent Vegetation shall be seeded or sodded on all exposed areas within ten (10) days after final grading. Mulch will be used for protection until seeding is established.
5. All work shall be done in accordance with the NJ State Standards for Soil Erosion and Sediment Control in New Jersey.
6. A sub–base course will be applied immediately following rough grading and installation of improvements in order to stabilize streets, roads, driveways and parking areas. In areas where no utilities are present, the sub–base shall be installed within 15 days or preliminary grading.
7. Immediately following initial disturbance or rough grading all critical areas subject to erosion (i.e.: steep slopes, roadway embankments) will receive a temporary seeding in combination with straw mulch or a suitable equivalent, at a rate of two (2) tons per acre, according to the NJ State Standards.
8. Any steep slopes receiving pipeline installation will be backfilled and stabilized daily, as the installation proceeds (i.e.: slopes greater that 3:1)
9. Traffic control Standards require the installation of a 50'x30'x6"pad of 1 1/2" or 2" stone, at all construction driveways, immediately after initial site disturbance.
10. At the time when the site preparation for permanent vegetative stabilization is going to be accomplished, any soil that will not provide a suitable environment to support adequate vegetative ground cover, shall be removed or treated in such a way that will permanently adjust the soil conditions and render it suitable for vegetative ground cover. If the removal or treatment of the soil will not provide suitable conditions, non–vegetative means of permanent ground stabilization will have to be employed.
11. In that NJSA 4:24–39 et seq., requires that no Certificate of Occupancy be issued before the provisions of the Certified Plan for Soil Erosion and Sediment Control have been complied with for permanent measures, all site work for site plans and all work around individual lots in subdivisions, will have to be completed prior to the District issuing a Report of Compliance for the issuance of a Certificate of Occupancy by the Municipality.
12. Conduit Outlet Protection must be installed at all required outfalls prior to the drainage system becoming operational.
13. Any changes to the Certified Soil Erosion and Sediment Control Plan will require the submission of revised Soil Erosion and Sediment Control Plans to the District for recertification. The revised plans must meet all current NJ State Soil Erosion & Sediment Control Standards.
14. The Somerset–Union Soil Conservation District shall be notified of any changes in ownership.
15. Mulching to the NJ Standards is required for obtaining a Conditional Report of Compliance. Conditionals are only issued when the season prohibits seeding.
16. Contractor is responsible for keeping all adjacent roads clean during life of construction project.
17. The developer shall be responsible for remediating any erosion or sediment problems that arise as a result of ongoing construction at the request of the Somerset–Union Soil Conservation District.
18. Hydro seeding is a two– step process. The first step includes seed, fertilizer, lime, etc., along with minimal amounts of mulch to promote consistency, good seed to soil contact, and give a visual indication of coverage. Upon completion of seeding operation, hydromulch should be applied at a rate of 1500 lbs. per acre in second step. The use of hydromulch, as opposed to straw, is limited to optimum seeding dates as listed in the NJ Standards.
19. Unfiltered dewatering is not permitted. Necessary precautions must be taken during all dewatering operations to minimize soil transfer. Any dewatering methods used must be in accordance with the Standard for Dewatering.

Revised 5/15/15

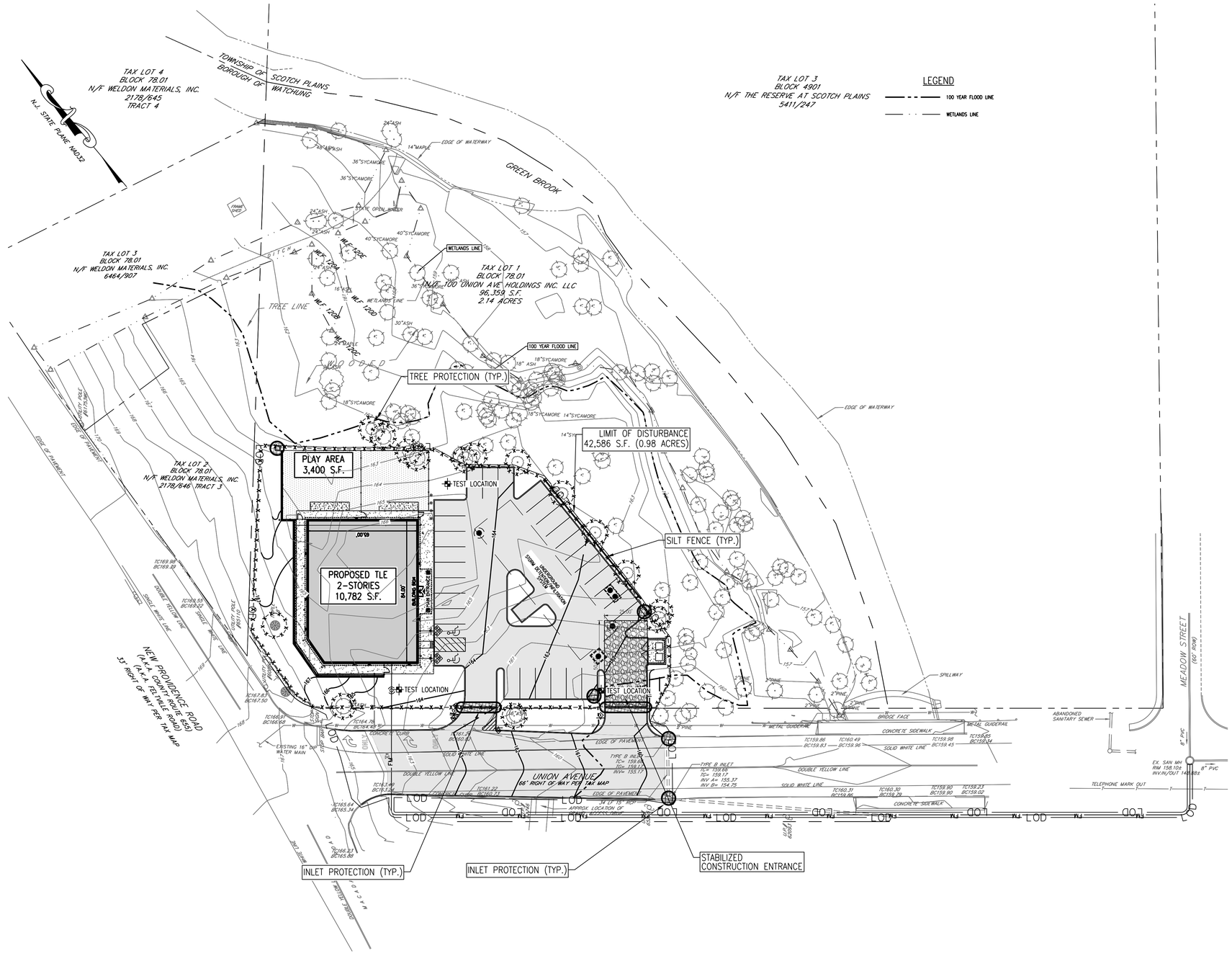


SEQUENCE OF CONSTRUCTION:

| ITEM | DURATION |
|---|---|
| 1. INSTALL SOIL EROSION MEASURES | 1 |
| 2. DEMO SITE | 15 |
| 3. GRADE SITE FOR BUILDING AND PAVEMENT | 15 |
| 4. CONSTRUCT BUILDING, PLAY AREA, AND STAIRS/WALLS | 180 |
| 5. CONSTRUCT STORM SYSTEM & CONNECT UTILITIES | 7 |
| 6. INSTALL NEW CURB & POUR NEW WALKWAYS | 5 |
| 7. PAVE DRIVEWAYS & LINESTRIPING | 10 |
| 8. PLANT NEW VEGETATION & REMOVE SOIL EROSION MEASURES | 2 |
| TOTAL: | 235 DAYS |

# SOIL EROSION AND SEDIMENT CONTROL

SCALE: 1"=30'


Jarmel Kizel
ARCHITECTS AND ENGINEERS INC.
42 OKNER PARKWAY
LIVINGSTON, NEW JERSEY 07039
TEL: 973-994-9669
FAX: 973-994-4069
www.jarmelkizel.com

Architecture
Engineering
Interior Design
Implementation Services


ISSUE

| NO. | DATE | DESCRIPTION | INT. |
|---|---|---|---|
| 1. | 6.13.19 | COMPLETENESS REVIEW | GPG |
| 2. | 10.31.19 | PLANNING BOARD SUBMISSION | GPG |
| 3. | 12.02.19 | P.B. RE-SUBMISSION | GPG |
| 4. | 3.04.20 | P.B. RE-SUBMISSION | GPG |
| 5. | 9.04.20 | FOR 9.15.20 P.B. HEARING | GPG |

REVISION

| NO. | DATE | DESCRIPTION | INT. |
|---|---|---|---|
| 1. | 10.31.19 | PER NJDEP & TECH. REVIEW #1 | GPG |
| 2. | 12.02.19 | REVISED BUILDING LOCATION | APP |
| 3. | 8.31.20 | REV WETLAND LINE & GRADING | GPG |


PRINCIPALS
MATTHEW B. JARMEL, AIA, MBA
AZ: LIC 48197
CO: LIC ARC-401483
CT: LIC AR.0011415
DC: LIC ARC101849
DE: LIC S5-0007256
FL: LIC AR98965
GA: LIC RA011484
IA: LIC 05577
IL: LIC 001.0200469
MA: LIC AR10286
MD: LIC 12662
ME: LIC 1301052189
NJ: LIC 21AI00294700
NM: LIC 15100
NY: LIC 031599
OH: LIC A-99-12444
PA: LIC RA-014851-B
RI: LIC ARC.0004165
SC: LIC AR.9163
TN: LIC 103850
TX: LIC 20992
VA: LIC 0401 014089
VT: LIC 2453
WA: LIC 21AI00294700
WV: LIC 33U00243100
IRWIN H. KIZEL, AIA, PP
CT: LIC 08025
RICHARD A. JARMEL, PE
CT: LIC PEN0027735
FL: LIC 82149
MI: LIC 6201052339
DE: LIC 18754
VT: LIC 08498
ASSOCIATES
RONALD A. BROKENSHIRE, PE
PA: LIC PE-059022811
DAVID L. LESSNE, RA
CT: LIC ARI-0011748
MA: LIC 31425
MICHAEL J. VORLAND, RA
NY: LIC 036993
GERARD P. GESARIO, PE
NJ: LIC GE038255
FREDERICK KINCAID, RA
NJ: LIC 21AI01018294
JEROME LESLIE EBEN, FAIA, PP
NY: LIC 019853
PA: LIC RA-014151-B
IL: LIC 001.017694
CHERYL SCHWEIKER, AIA
NJ: LIC 21AI02069000
PA: LIC RA407927
NJ State Board Of Architects Authorization No. 21
NJ State Board Of Engineers & Land Surveyors Authorization No. 24GA28053000


Project: THE LEARNING EXPERIENCE
PRELIMINARY AND FINAL SITE PLAN
100 UNION AVENUE
BLOCK 78.01, LOT 1, TAX SHEET # 22
BOROUGH OF WATCHUNG
COUNTY OF SOMERSET, STATE OF NEW JERSEY

| Project No: | Scale: |
|---|---|
| TLENJ-S-18-295 | 1" = 30' |
| Drawn By: A.P.P. | Approved By: G.P.G. |

Drawing Name:
SOIL EROSION AND SEDIMENT CONTROL PLAN

Drawing Number: C-800

Sheet No: 11 of: 17

Initial Date: MAY 30, 2019

GERARD P. GESARIO
PROFESSIONAL ENGINEER
N.J. LIC. #GE038255


S:\PROJECTS\TLENJ-S-18-295 TLE WATCHUNG UNION AVENUE\CAD\18-295 C-800 SEBSC PLAN.DWG GGESARIO PLOTTED: 09/02/2020

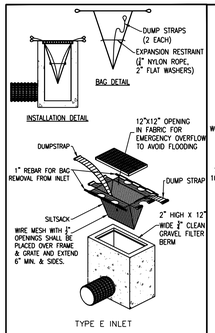


TYPE E INLET

NOTES:
1. CONTRACTOR IS TO CLEAN INLET FILTER AFTER EVERY STORM.
2. CONTRACTOR TO REMOVE FABRIC AND MESH JUST PRIOR TO PAVING.
3. THE PROTECTION DEVICE WILL BE DESIGNED TO CAPTURE OR FILTER RUNOFF FROM THE 1 YEAR, 24 HOUR STORM EVENT AND SHALL SAFELY CONVEY HIGHER FLOWS DIRECTLY INTO THE STORM SYSTEM

**INLET FILTER**
N.T.S.

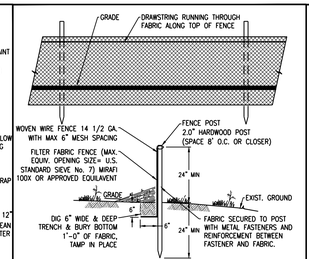


METHOD OF INSTALLATION:

1. EXCAVATE AND SECURE BOTTOM 24" OF SILT FENCE BELOW GRADE AS SHOWN. FOR PAVEMENT LAYERS ONLY, LAY BOTTOM 6" OF FABRIC ON GROUND AND BACKFILL OVER FABRIC.
2. EXCEPT FOR THE END POST, DRIVE ALL POSTS INTO THE GROUND AT BACK SIDE OF TRENCH SPACED A MAXIMUM OF 8 FEET O.C.
3. ATTACH FILTER FABRIC TO POST AND STRETCH BETWEEN POSTS.
4. WHERE ENDS OF FABRIC COME TOGETHER, THEY WILL BE OVERLAPPED, FOLDED AND STAPLED TO PREVENT SEDIMENT BYPASS.

MAINTENANCE:

1. THE FENCE INSTALLATION SHOULD BE INSPECTED WEEKLY & AFTER EVERY PRECIPITATION EVENT. ANY NECESSARY REPAIRS WILL BE MADE IMMEDIATELY.
2. ACCUMULATED SEDIMENTS WILL BE REMOVED AS REQUIRED TO KEEP THE FENCE FUNCTIONAL. IN ALL CASES, REMOVE DEPOSITS WHERE ACCUMULATIONS REACH 1/2 THE ABOVE GROUND HEIGHT OF THE FENCE.
3. ALL UNDERCUTTING OR EROSION OF THE TOE ANCHOR WILL BE REPAIRED IMMEDIATELY WITH ROCK.
4. ADHERE TO ANY MANUFACTURER'S RECOMMENDATIONS FOR REPLACING FILTER FABRIC FENCE DUE TO WEATHERING.

**48" SILT FENCE DETAIL**
N.T.S.

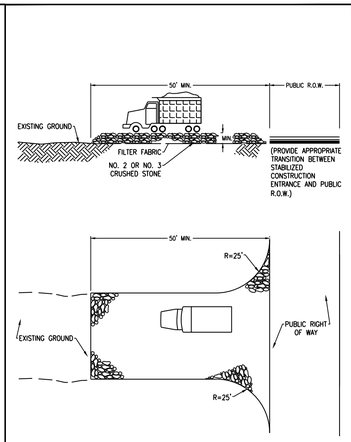


**STABILIZED CONSTRUCTION ENTRANCE**
N.T.S.

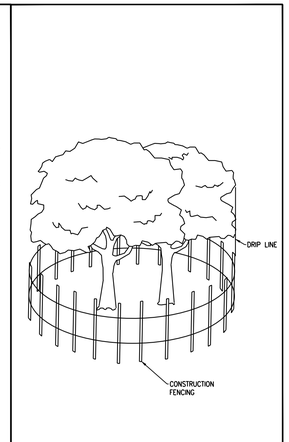


**TREE PROTECTION DETAIL**
N.T.S.

## Soil De-compaction and Testing Requirements

### Soil Compaction Testing Requirements

1. Subgrade soils **prior to the application of topsoil** (see permanent seeding and stabilization notes for topsoil requirements) shall be free of excessive compaction to a depth of 6.0 inches to enhance the establishment of permanent vegetative cover.

2. Areas of the site which are subject to compaction testing and/or mitigation are **graphically denoted** on the certified soil erosion control plan.

3. **Compaction testing locations** are denoted on the plan. A copy of the plan or portion of the plan shall be used to mark locations of tests, and attached to the compaction remediation form, available from the local soil conservation district. This form must be filled out and submitted prior to receiving a certificate of compliance from the district.

4. In the event that testing indicates compaction in excess of the maximum thresholds indicated for the simplified testing methods (see details below), the contractor/owner shall have the option to perform either (1) compaction mitigation over the entire mitigation area denoted on the plan (excluding exempt areas), or (2) perform additional, more detailed testing to establish the limits of excessive compaction whereupon only the excessively compacted areas would require compaction mitigation. Additional detailed testing shall be performed by a trained, licensed professional.

### Compaction Testing Methods

A. Probing Wire Test (see detail)
B. Hand-held Penetrometer Test (see detail)
C .Tube Bulk Density Test (licensed professional engineer required
D. Nuclear Density Test (licensed professional engineer required)

Note: Additional testing methods which conform to ASTM standards and specifications, and which produce a dry weight, soil bulk density measurement may be allowed subject to District approval.

Soil compaction testing is not required if/when subsoil compaction remediation (scarification/tillage (6" minimum depth) or similar) is proposed as part of the sequence of construction.

### Procedures for Soil Compaction Mitigation

Procedures shall be used to mitigate excessive soil compaction **prior to placement of topsoil** and establishment of permanent vegetative cover.

**Restoration of compacted soils shall be through deep scarification/tillage (6" minimum depth)** where there is no danger to underground utilities (cables, irrigation systems, etc.). In the alternative, another method as specified by a New Jersey Licensed Professional Engineer maybe substituted subject to District Approval.

### Simplified Testing Methods

**Probing Wire Test- 15.5 ga steel wire (survey flag)**

Note: soil should be moist but not saturated. Do not test when soil is excessively dry or subject to freezing temperatures. Slow, steady downward pressure used to advance the wire.

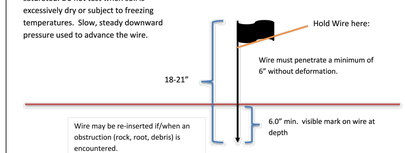


**Handheld Soil Penetrometer Test**

Note: soil should be moist but not saturated. Do not test when soil is excessively dry or subject to freezing temperatures. Slow, steady downward pressure used to advance the probe. Probe must penetrate at least 6" with less than 300 psi reading on the gage.

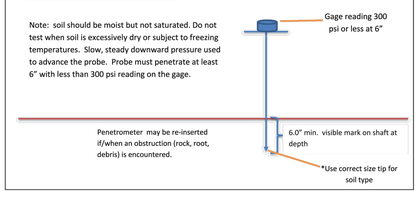



Jarmel Kizel
ARCHITECTS AND ENGINEERS INC.
42 OKNER PARKWAY
LIVINGSTON, NEW JERSEY 07039
TEL: 973-994-9669
FAX: 973-994-4069
www.jarmelkizel.com

Architecture
Engineering
Interior Design
Implementation Services


ISSUE

| NO. | DATE | DESCRIPTION | INT. |
|---|---|---|---|
| 1. | 6.13.19 | COMPLETENESS REVIEW | GPG |
| 2. | 10.31.19 | PLANNING BOARD SUBMISSION | GPG |
| 3. | 12.02.19 | P.B. RE-SUBMISSION | GPG |
| 4. | 3.04.20 | P.B. RE-SUBMISSION | GPG |
| 5. | 9.04.20 | FOR 9.15.20 P.B. HEARING | GPG |

REVISION

| NO. | DATE | DESCRIPTION | INT. |
|---|---|---|---|
| 1. | 10.31.19 | PER NJDEP & TECH. REVIEW #1 | GPG |
| 2. | 12.02.19 | REVISED BUILDING LOCATION | APP |


**PRINCIPALS**
**MATTHEW B. JARMEL, AIA, MBA** NJ LIC AI0-12787; AZ LIC AS-19; MN LIC 40404; CO LIC ARC-401483; NC LIC 10120; CT LIC ARI.0011415; NH LIC 3501; DC LIC ARC1001849; NY LIC 026673; DE LIC SS-0007256; OH LIC A-99-12444; FL LIC AR98965; PA LIC RA-014851-8; GA LIC RA011484; RI LIC ARC.0004765; IA LIC 05577; SC LIC AR9163; IL LIC 001-020069; TN LIC 103850; MA LIC AR10286; TX LIC 20992; MD LIC 12682; VA LIC 0401 014089; NJ LIC 1301052189; VT LIC 2453
**IRWIN H. KIZEL, AIA, PP** NJ LIC 21A00794700; CT LIC 08029; NJ PP LIC 33U00243100
**RICHARD A. JARMEL, PE** NJ LIC 37491; FL LIC PE46027735; MN LIC 47482; FL LIC 83149; NY LIC 076896-1; CT LIC PEC.0052339; NY LIC 076896-200; DE LIC 18734; MA LIC 50445; VT LIC 88498; TX LIC 123822
**ASSOCIATES**
**RONALD A. BROKENSHIRE, PE** NJ LIC GE45511; CT LIC PEN.0002811; PA LIC PE085817
**DAVID L. LESESNE, RA** NJ LIC AI-13231; CT LIC AIS-0011748; NY LIC 026719; MA LIC 31426; PA LIC RA-405081
**MICHAEL J. VORLAND, RA** NY LIC 036993
**GERARD P. GESARIO, PE** NJ LIC GE038255
**FREDERICK KINCARD, RA** NJ LIC 21AI01802940
**JEROME LESLIE EBEN, FAIA, PP** NJ LIC AI-8883; PA LIC 014502-8; NY LIC 019151; VA LIC 0401 012073; IL LIC 001 037694
**CHERYL SCHWEIKER, AIA** NJ LIC 21AI02060900; PA LIC RA407927
NJ State Board Of Architects Authorization No. 161
NJ State Board Of Engineers & Land Surveyors Authorization No. 24GA28053000


Project: **THE LEARNING EXPERIENCE**
**PRELIMINARY AND FINAL SITE PLAN**
**100 UNION AVENUE**
**BLOCK 78.01, LOT 1, TAX SHEET # 22**
**BOROUGH OF WATCHUNG**
**COUNTY OF SOMERSET, STATE OF NEW JERSEY**

| Project No: | Scale: |
|---|---|
| **TLENJ-S-18-295** | **AS NOTED** |
| Drawn By: **A.P.P.** | Approved By: **G.P.G.** |

Drawing Name:

**SOIL EROSION AND SEDIMENT CONTROL DETAILS**

Drawing Number: **C-801**

Sheet No: **12** of: **17**

Initial Date: **MAY 30, 2019**

**GERARD P. GESARIO**
**PROFESSIONAL ENGINEER**
**N.J. LIC. #GE038255**


S:\PROJECTS\TLENJ-S-18-295 TLE WATCHUNG UNION AVENUE\CAD\18-295 C-801 SE&SC DETAILS.DWG GGESARIO PLOTTED: 09/02/2020

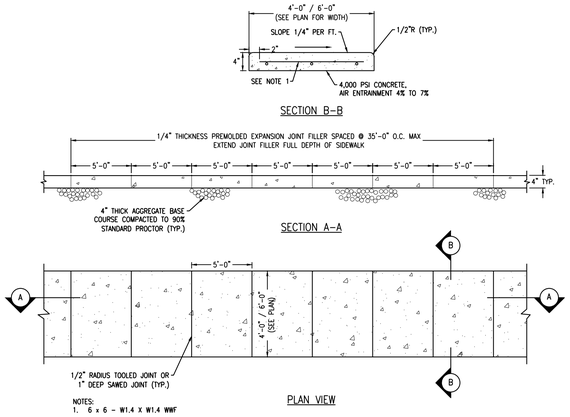


## CONCRETE WALKS & PICNIC PADS

N.T.S.

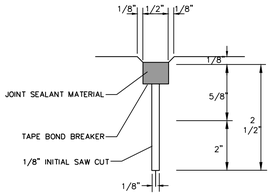


## CONSTRUCTION JOINT (MAX 20'-0" OC)

N.T.S.

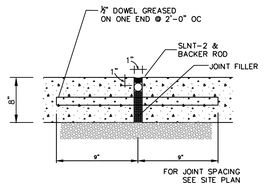


## EXPANSION JOINT @ MAX 20'-0" OC

N.T.S.

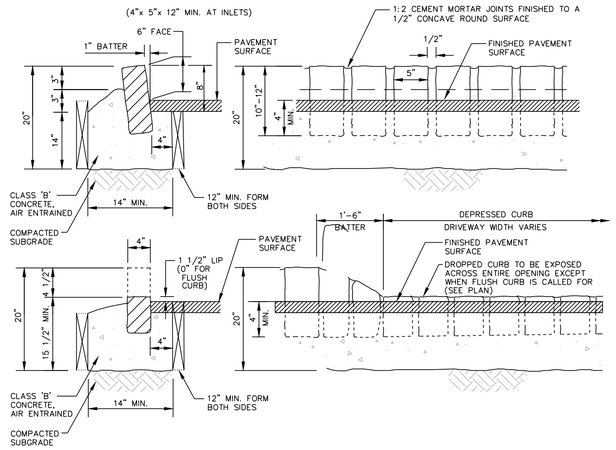


## BELGIAN BLOCK CURB

N.T.S.

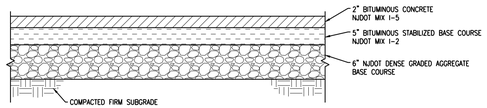


## OFF-SITE ASPHALT PAVEMENT SECTION

N.T.S.

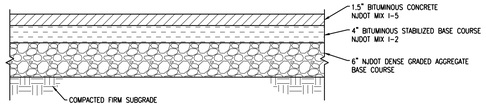


## ON-SITE ASPHALT PAVEMENT SECTION

N.T.S.

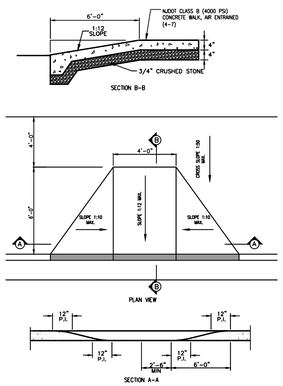


## HANDICAP CURB AT SIDEWALK

N.T.S.

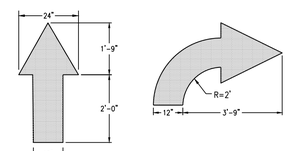


NOTES:

1. WORDS AND ARROWS FOR DRIVEWAYS SHALL BE APPLIED ACCORDING TO REQUIREMENTS OF THE MANUAL ON UNIFORM TRAFFIC CONTROL DEVICES FOR STREETS AND HIGHWAYS.
2. THESE TRAFFIC FLOW ARROWS SHALL BE PAINTED REFLECTIVE YELLOW.

## TRAFFIC FLOW ARROWS

N.T.S.

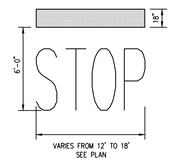


NOTES:

1. WORDS AND ARROWS FOR DRIVEWAYS SHALL BE APPLIED ACCORDING TO REQUIREMENTS OF THE MANUAL ON UNIFORM TRAFFIC CONTROL DEVICES FOR STREETS AND HIGHWAYS.
2. THESE WORDS AND BAR ARE TO BE PAINTED REFLECTIVE WHITE.

## STOP BAR DETAIL

N.T.S.

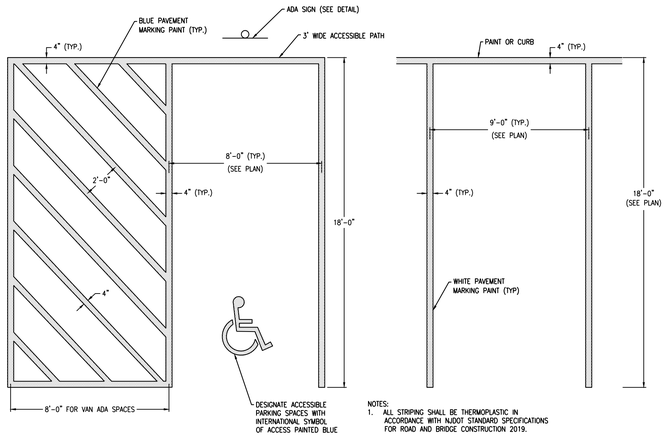


NOTES:

1. ALL STRIPING SHALL BE THERMOPLASTIC IN ACCORDANCE WITH NJDOT STANDARD SPECIFICATIONS FOR ROAD AND BRIDGE CONSTRUCTION 2019.

## ADA PARKING SPACE STRIPING

N.T.S.

## STANDARD PARKING SPACE STRIPING

N.T.S.

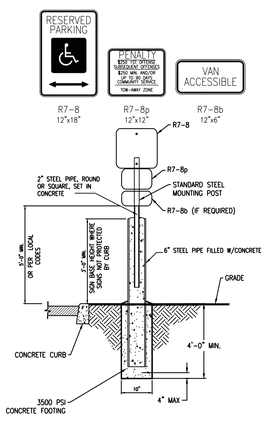


NOTES:

1. ALL POSTS SHALL BE OF ADEQUATE LENGTH TO MEET THE REQUIREMENTS FOR ERECTION AS STATED IN THE "MANUAL ON UNIFORM TRAFFIC CONTROL DEVICES FOR STREETS AND HIGHWAYS".
2. ALL POSTS AND BRACKETS SHALL BE CUT, BENT, AND HOLES PUNCHED AND DRILLED BEFORE GALVANIZING, WHICH SHALL BE IN CONFORMANCE WITH CURRENT A.S.T.M. SPECIFICATION A 123
3. INSTALLATION, DIMENSIONS, COLOR, AND DETAILS OF VARIOUS SIZED SIGNS, SHIELDS, AND ACCESSORY PANELS TO FOLLOW STANDARDS IN THE CURRENT "STANDARD HIGHWAY SIGNS PUBLICATION" AND THE "MANUAL ON UNIFORM TRAFFIC CONTROL DEVICES FOR STREETS AND HIGHWAYS"

SIGN FACE:

1. LETTERS, SYMBOLS AND BORDERS SHALL BE REFLECTORIZED.
2. ALL LETTERING SHALL BE UPPER CASE LETTERS OF THE TYPE APPROVED BY THE JOINT COMMITTEE ON UNIFORM TRAFFIC CONTROL DEVICES.
3. ALL LETTERS SHALL BE SERIES "C" ALPHABET IN ACCORDANCE WITH THE "MANUAL ON UNIFORM TRAFFIC CONTROL DEVICES".

## SIGN MOUNTING DETAIL WITH BOLLARD

N.T.S.

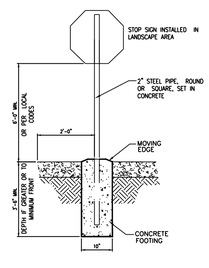


## TRAFFIC SIGN MOUNTING DETAIL

N.T.S.

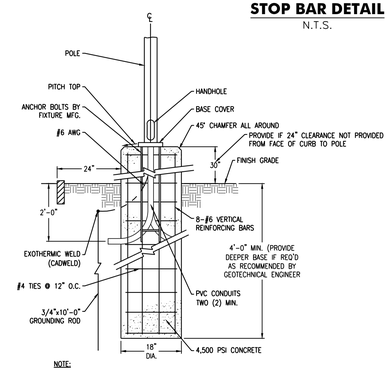


NOTE:

1. FOOTING DESIGN BY OTHERS.
2. CONTRACTOR SHALL SUBMIT SHOP DRAWINGS FOR APPROVAL.

## POLE BASE DETAIL

N.T.S.


Jarmel Kizel
ARCHITECTS AND ENGINEERS INC.
42 OKNER PARKWAY
LIVINGSTON, NEW JERSEY 07039
TEL: 973-994-9669
FAX: 973-994-4069
www.jarmelkizel.com

Architecture
Engineering
Interior Design
Implementation Services


ISSUE

| NO. | DATE | DESCRIPTION | INT. |
|---|---|---|---|
| 1. | 6.13.19 | COMPLETENESS REVIEW | GPG |
| 2. | 10.31.19 | PLANNING BOARD SUBMISSION | GPG |
| 3. | 12.02.19 | P.B. RE-SUBMISSION | GPG |
| 4. | 3.04.20 | P.B. RE-SUBMISSION | GPG |
| 5. | 9.04.20 | FOR 9.15.20 P.B. HEARING | GPG |

REVISION

| NO. | DATE | DESCRIPTION | INT. |
|---|---|---|---|
| 1. | 10.31.19 | PER NJDEP & TECH. REVIEW #1 | GPG |
| 2. | 12.02.19 | REVISED BUILDING LOCATION | APP |


**PRINCIPALS**

**MATTHEW B. JARMEL, AIA, MBA**
AZ LIC 48159
CO LIC ARC-401483
CT LIC AR.0011415
DC LIC ARC101849
DE LIC SS-0007256
FL LIC AR98965
GA LIC 6401484
IA LIC 05577
IL LIC 001.020069
MA LIC AR10286
MD LIC 12662
ME LIC 1301052189
CT LIC 08029
NJ LIC 21AI00794700
PA LIC 033U002431OO

**IRWIN H. KIZEL, AIA, PP**
NJ LIC AI0-12787
MN LIC 46404
NC LIC 10120
NH LIC 3501
NY LIC 024673
OH LIC A-99-12444
PA LIC RA-014851-B
RI LIC AIC.0004765
SC LIC AR.9163
TN LIC 103859
TX LIC 20992
VA LIC 0401 014089
VT LIC 2453
NJ PP LIC 33U00243100

**RICHARD A. JARMEL, PE**
CT LIC PENG027735
FL LIC 83149
MI LIC 6201052339
DE LIC 18754
VT LIC 08498
NJ LIC 37491
MN LIC 47482
NY LIC 073899-1
PA LIC PE070600
MA LIC 50445
TX LIC 123822

**ASSOCIATES**
**RONALD A. BROKENSHIRE, PE**
NJ LIC 24GE05511
PA LIC PE-069022811
**DAVID L. LESSNAU, RA**
NJ LIC 41-13231
CT LIC AR-0011748
NY LIC 024719
MA LIC 31425
PA LIC RA-405081
**MICHAEL J. VORLAND, RA**
NY LIC 036993
**GERARD P. GESARIO, PE**
NJ LIC GE038255
**FREDERICK KINCAID, RA**
NJ LIC 21AI01802914
**JEROME LESLIE EBEN, FAIA, PP**
NJ LIC AI-10853
NY LIC 019-D
PA LIC 0401 017694
IL LIC 001.015694
**CHERYL SCHWEIKER, AIA**
NJ LIC 21AI00269000
PA LIC RA407927

NJ State Board Of Architects Authorization No. 13
NJ State Board Of Engineers & Land Surveyors Authorization No. 24GA28053000


Project: **THE LEARNING EXPERIENCE**
**PRELIMINARY AND FINAL SITE PLAN**
**100 UNION AVENUE**
**BLOCK 78.01, LOT 1, TAX SHEET # 22**
**BOROUGH OF WATCHUNG**
**COUNTY OF SOMERSET, STATE OF NEW JERSEY**

| Project No: | Scale: |
|---|---|
| TLENJ-S-18-295 | AS NOTED |
| Drawn By: A.P.P. | Approved By: G.P.G. |

Drawing Name: **DETAIL SHEET**

Drawing Number: **C-900**

Sheet No: **13** of: **17**

Initial Date: **MAY 30, 2019**

**GERARD P. GESARIO PROFESSIONAL ENGINEER N.J. LIC. #GE038255**


S:\PROJECTS\TLENJ-S-18-295 TLE WATCHUNG UNION AVENUE\CAD\18-295 C-900 DETAIL-1.DWG APROTOPAPAS PLOTTED: 09/02/2020

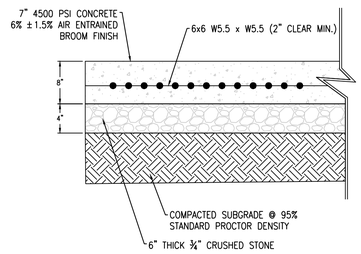


## CONCRETE SLAB FOR DUMPSTER
N.T.S.

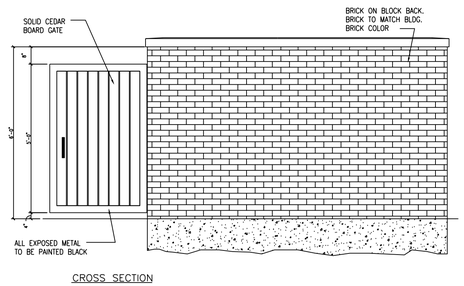


## TRASH ENCLOSURE WALL DETAIL
N.T.S.

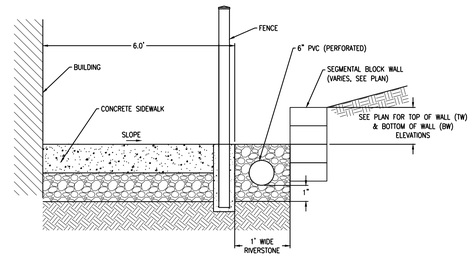


## PERFORATED PIPE DETAIL
N.T.S.

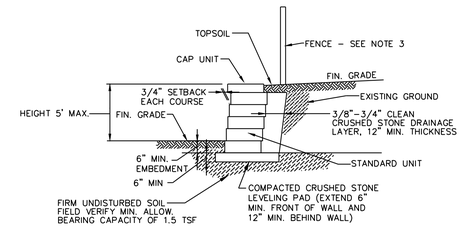


NOTES:

1. STABILITY CALCULATIONS PREPARED BY A P.E. TO BE PROVIDED TO THE TOWNSHIP ENGINEER FOR APPROVAL PRIOR TO CONSTRUCTION.

2. BLOCK TO BE ALLEN BLOCK OR APPROVED EQUAL.

3. PROVIDE FENCE ON TOP OF WALLS 30" OR HIGHER. FENCE SHALL BE SPLIT RAIL WITH MESH. UNLESS OTHERWISE NOTED ON PLANS.

## TYPICAL BLOCK WALL DETAIL
N.T.S.

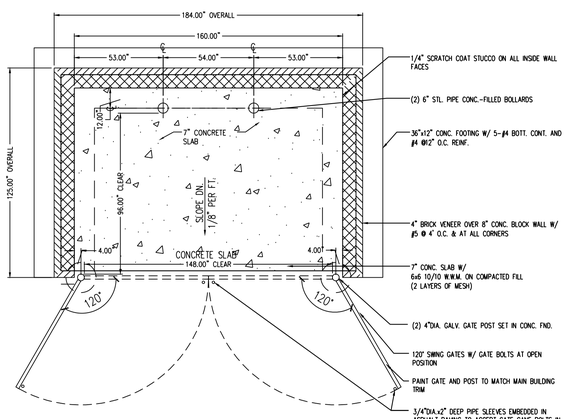


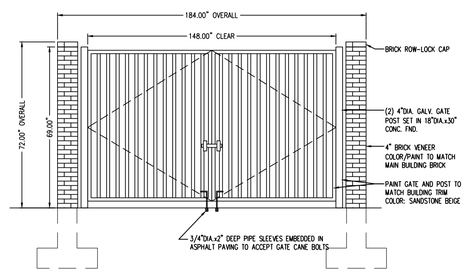


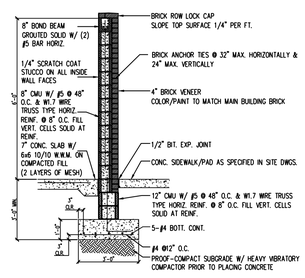


## TRASH ENCLOSURE DETAIL
N.T.S.

| AREA OF BEARING FACE OF THRUST BLOCK IN SQUARE FEET (AREA BASED ON INTERNAL PRESSURE OF 150 PSIG AND SOIL BEARING PRESSURE OF 2000 PSF) (SEE NOTE 1) | | | | | | | |
|---|---|---|---|---|---|---|---|
| PIPE SIZE | BEND | | | | TEE PLUG | REDUCER | |
| | 90° | 45° | 22-1/2° | 11-1/4° | | SIZE | AREA |
| 4" – 6" | 4 | 2.5 | 1.5 | 1 | 3 | 6" x 4" | 2 |
| 8" | 7 | 4 | 2 | 1 | 5 | 8" x 6" | 2.5 |
| 12" | 14.5 | 8 | 4 | 2 | 10.5 | 12" x 8" | 5.5 |

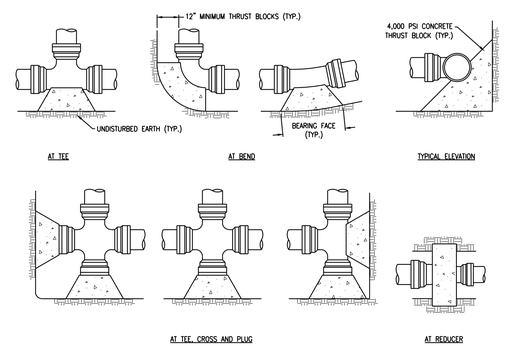


NOTES:

1. SPECIAL DESIGN IS REQUIRED FOR FITTINGS ON DOMESTIC WATER MAIN PIPE LARGER THAN 12 INCHES.
2. THRUST BLOCK IS TO BE POURED AGAINST UNDISTURBED EARTH. WIDTH OF THRUST BLOCK SHOULD BE APPROXIMATELY TWICE HEIGHT.
3. THRUST BLOCK IS TO BE INSTALLED AT ALL BENDS, PLUGS, TEES, AND TAPPING SLEEVE AND VALVE CONNECTIONS.
4. FACTORY CAST OFFSETS ARE TO BE TREATED AS (2) 45 DEGREE BENDS.
5. FOR REDUCERS, THRUST BLOCK IS TO BE KEYED INTO WALLS AND BOTTOM OF TRENCH.
6. MECHANICAL RESTRAINT IS REQUIRED IN ADDITION TO THRUST BLOCK.
7. WOOD BLOCKING IS NOT PERMITTED.

## THRUST BLOCK DETAILS
N.T.S.

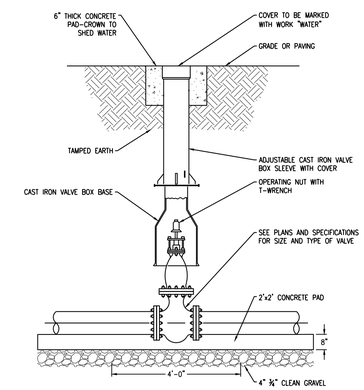


## CURB VALVE DETAIL
N.T.S.

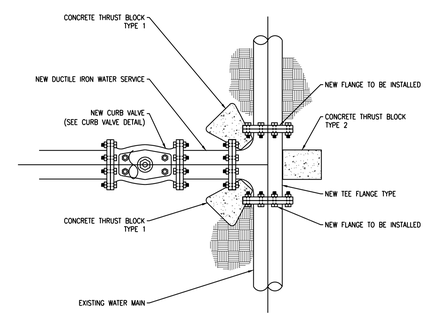


## WATER MAIN CONNECTION DETAIL
N.T.S.


Jarmel Kizel
ARCHITECTS AND ENGINEERS INC.
42 OKNER PARKWAY
LIVINGSTON, NEW JERSEY 07039
TEL: 973-994-9669
FAX: 973-994-4069
www.jarmelkizel.com

Architecture
Engineering
Interior Design
Implementation Services


ISSUE

| NO. | DATE | DESCRIPTION | INT. |
|---|---|---|---|
| 1. | 6.13.19 | COMPLETENESS REVIEW | GPG |
| 2. | 10.31.19 | PLANNING BOARD SUBMISSION | GPG |
| 3. | 12.02.19 | P.B. RE-SUBMISSION | GPG |
| 4. | 3.04.20 | P.B. RE-SUBMISSION | GPG |
| 5. | 9.04.20 | FOR 9.15.20 P.B. HEARING | GPG |

REVISION

| NO. | DATE | DESCRIPTION | INT. |
|---|---|---|---|
| 1. | 10.31.19 | PER NJDEP & TECH. REVIEW #1 | GPG |
| 2. | 12.02.19 | REVISED BUILDING LOCATION | APP |


**PRINCIPALS**

**MATTHEW B. JARMEL, AIA, MBA** — AZ LIC 48159; CO LIC ARC-401483; CT LIC ARC0011415; DC LIC ARC101849; DE LIC S5-0007256; FL LIC AR98965; GA LIC R4011484; IA LIC 05577; IL LIC 001-020069; MA LIC 0106286; MD LIC 13663; ME LIC 1301050189; NJ LIC 21AI00294700; NM LIC 3301; NY LIC 024673; OH LIC A-99-12444; PA LIC RA-014851-8; RI LIC ARC.0004765; SC LIC AR.9163; TN LIC 102805; TX LIC 20092; VA LIC 0401 014089; VT LIC 2453

**IRWIN H. KIZEL, AIA, PP** — CT LIC 08023; NJ LIC 21AI00294700; NJ PP LIC 33U00243100

**RICHARD A. JARMEL, PE** — FL LIC 82727735; IL LIC 062-057331; MI LIC 6201052339; DE LIC 18754; VT LIC 88498; NJ LIC 37491; NY LIC 073898-1; PA LIC PE070600; MA LIC 50445; TX LIC 123822

**ASSOCIATES**

**RONALD A. BROKENSHIRE, PE** — CT LIC PEN.0002811; PA LIC PE085817; NJ LIC GE45511

**DAVID L. LESESNE, RA** — CT LIC AR-0011748; PA LIC RA-405081; NJ LIC AI-13231; NY LIC 026719

**MICHAEL J. VORLAND, RA** — NY LIC 036990; PA LIC RA-405081

**GERARD P. GESARIO, PE** — NJ LIC GE038255

**FREDERICK KINGARD, RA** — NJ LIC 21AI01018294; NY LIC D19153

**JEROME LESLIE EBEN, FAIA, PP** — NJ LIC AI-8883; PA LIC 014502-A; NY LIC D19153; VA LIC 0401 012073; IL LIC 001 037694

**CHERYL SCHWEIKER, AIA** — NJ LIC 21AI02069000; PA LIC RA407927

NJ State Board Of Architects Authorization No. 163
NJ State Board Of Engineers & Land Surveyors Authorization No. 24GA28053000


Project: **THE LEARNING EXPERIENCE**
**PRELIMINARY AND FINAL SITE PLAN**
**100 UNION AVENUE**
**BLOCK 78.01, LOT 1, TAX SHEET # 22**
**BOROUGH OF WATCHUNG**
**COUNTY OF SOMERSET, STATE OF NEW JERSEY**

| Project No: | Scale: |
|---|---|
| TLENJ-S-18-295 | AS NOTED |
| Drawn By: A.P.P. | Approved By: G.P.G. |

Drawing Name: **DETAIL SHEET**

Drawing Number: **C-901**

Sheet No: 14 of: 17

Initial Date: **MAY 30, 2019**

**GERARD P. GESARIO**
**PROFESSIONAL ENGINEER**
**N.J. LIC. #GE038255**


S:\PROJECTS\TLENJ-S-18-295 TLE WATCHUNG UNION AVENUE\CAD\18-295 C-901 DETAIL-2.DWG APROTOPAPAS PLOTTED: 09/02/2020

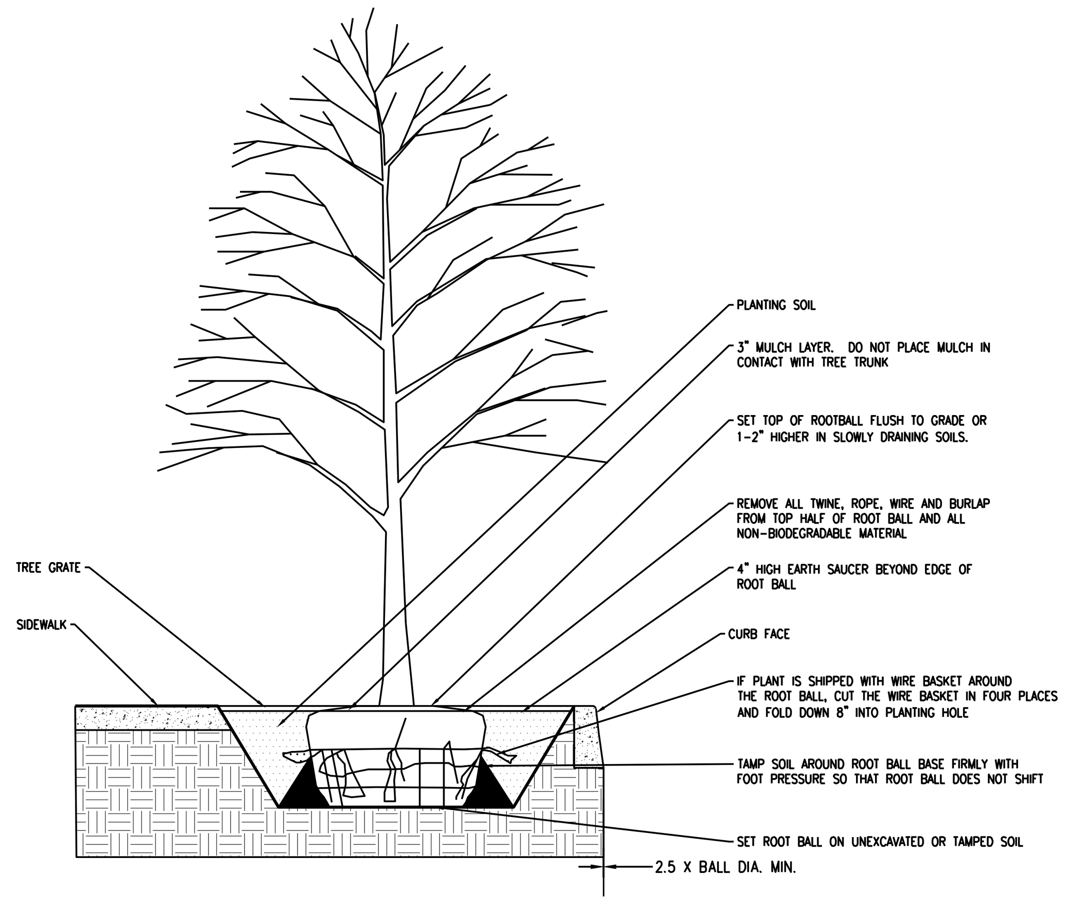


DECIDUOUS TREE PLANTING

N.T.S.

NOTES:

1. WIRE OR CABLE SIZE SHALL BE AS FOLLOWS:
   TREES UP TO 2.5 IN. CALIPER - 14 GAUGE
   TREES 2.5 IN. TO 3 IN. CALIPER - 12 GAUGE
2. TIGHTEN WIRE OR CABLE ENOUGH TO KEEP TREE FROM SLIPPING. ALLOW FOR SOME TRUNK MOVEMENT. PLASTIC HOSE SHALL BE LONG ENOUGH TO ACCOMMODATE 1.5 IN. OF GROWTH AND BUFFER ALL BRANCHES FROM THE WIRE.
3. TUCK ANY LOOSE ENDS OF THE WIRE OR CABLE INTO THE WIRE WRAP SO THAT NO SHARP WIRE ENDS ARE EXPOSED.
4. INSTALL THREE GUY WIRES PER TREE, SPACED EVENLY AROUND THE TRUNK.
5. STAKE TREES ONLY UPON THE APPROVAL OF THE LANDSCAPE ARCHITECT.

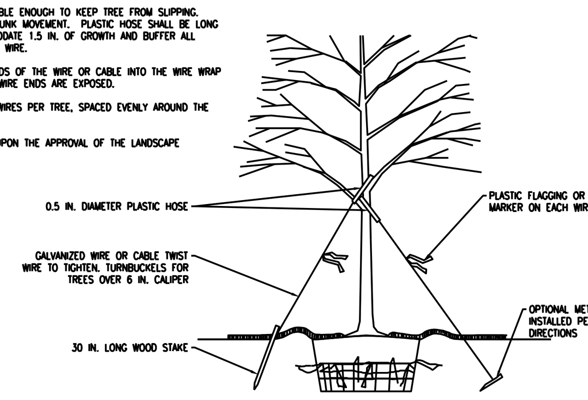


GENERAL NOTES:

ALL STAKES SHALL BE DRIVEN OUTSIDE THE EDGE OF THE ROOT BALL.

ASSURE THAT THE BEARING SURFACE OF THE PROTECTIVE COVERING OF THE WIRE OR CABLE AGAINST THE TREE TRUNK IS A MINIMUM OF 0.5 IN.

REMOVE ALL STAKING AS SOON AS THE TREE HAS GROWN SUFFICIENT ROOTS TO OVERCOME THE PROBLEM THAT REQUIRED THE TREE TO BE STAKED. STAKES SHALL BE REMOVED NO LATER THEN THE END OF THE FIRST GROWING SEASON AFTER PLANTING.

TREES NORMALLY DO NOT NEED TO BE STAKED AND STAKING CAN BE HARMFUL TO THE TREE. STAKING SHOULD BE DONE ONLY WITH THE APPROVAL OF THE LANDSCAPE ARCHITECT IF IT IS EXPECTED THAT THE TREE WILL NOT BE ABLE TO SUPPORT ITSELF.

THE FOLLOWING REASONS WHY TREES DO NOT REMAIN STRAIGHT:
- TREES WITH POOR-QUALITY ROOT BALLS OR ROOT BALLS THAT HAVE BEEN CRACKED OR DAMAGED. REJECT RATHER THAN STAKE.
- TREES THAT HAVE GROWN TOO CLOSE TOGETHER IN THE NURSERY, RESULTING IN WEAK TRUNKS. REJECT RATHER THAN STAKE.
- PLANTING PROCEDURES THAT DO NOT ADEQUATELY TAMP SOILS AROUND THE ROOT BALL. CORRECT THE PLANTING PROCEDURE.
- ROOT BALLS PLACED ON SOFT SOIL. TAMP SOILS UNDER ROOT BALL PRIOR TO PLANTING.
- ROOT BALLS WITH VERY SANDY SOIL OR VERY WET CLAY SOIL. STAKING ADVISABLE.
- TREES LOCATED IN A PLACE OF EXTREMELY WINDY CONDITIONS. STAKING ADVISABLE.

TREE STAKING DETAIL – TREES 3 INCH CALIPER OR LARGER

N.T.S.

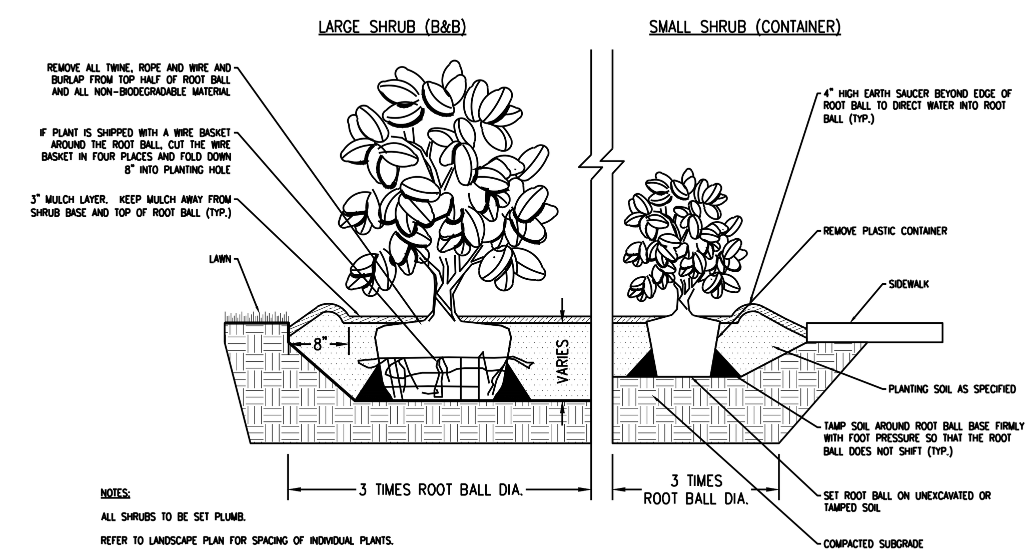


NOTES:

ALL SHRUBS TO BE SET PLUMB.

REFER TO LANDSCAPE PLAN FOR SPACING OF INDIVIDUAL PLANTS.

REMOVE ALL WIRE, PLASTIC TAGS OR SYNTHETIC MATERIAL FROM PLANTS PRIOR TO PLANTING.

SHRUB PLANTING

N.T.S.

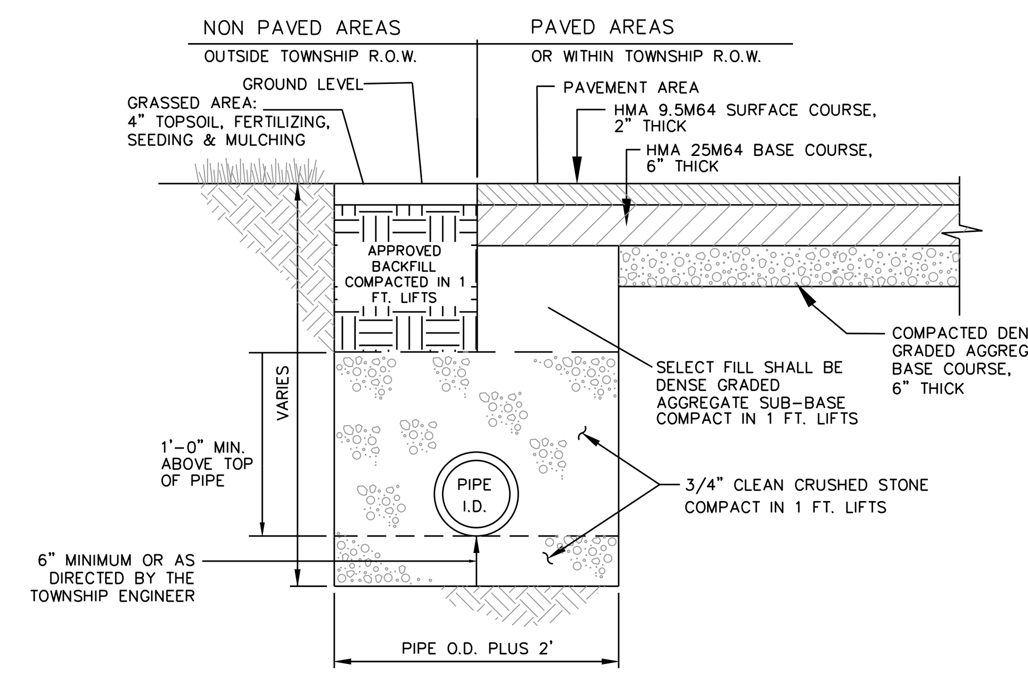


NOTES:
1. COMPACTED BACKFILL TO BE FREE OF EXCESSIVE CLAY, ORGANIC MATERIAL AND BOULDERS.
2. RECYCLED CONCRETE IS NOT TO BE USED AS BACKFILL.

**TRENCH/BACKFILL SECTION**

N.T.S.

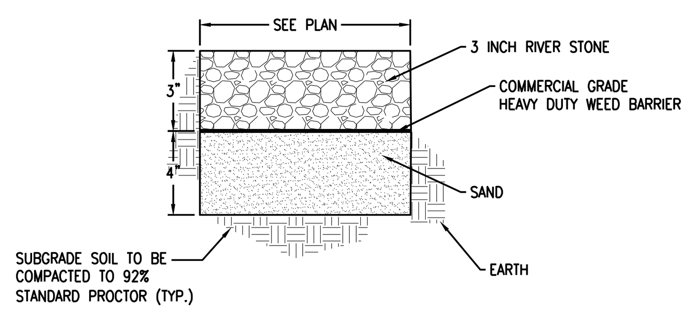


1. PROVIDE HEAVY DUTY POLYETHYLENE (BLACK) EDGING AROUND ALL PLANTED AREAS. EDGING TO BE 5-INCHES WIDE WITH A 1-INCH V-HOOK AT THE BASE AND A 1-INCH DIAMETER BEAD ON THE TOP.

**RIVER STONE DETAIL**

N.T.S.

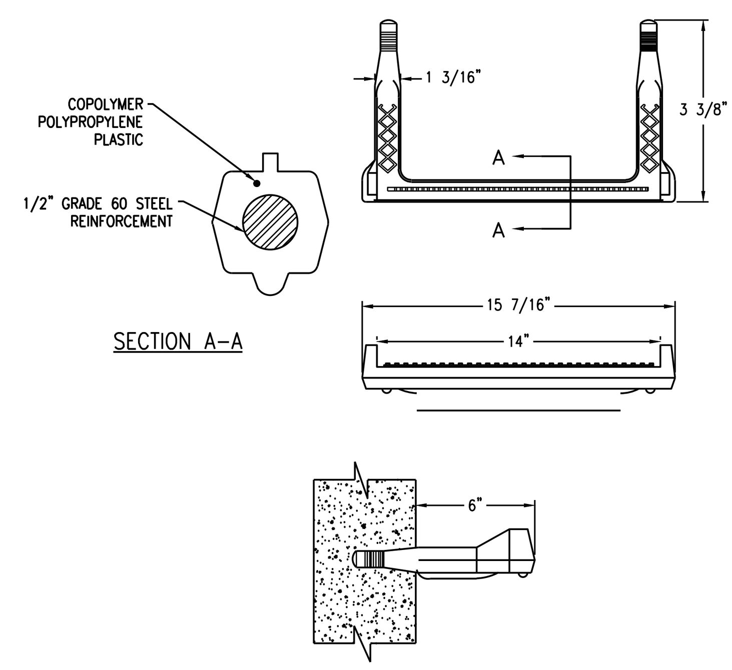


**PLASTIC LADDER RUNG**

N.T.S.

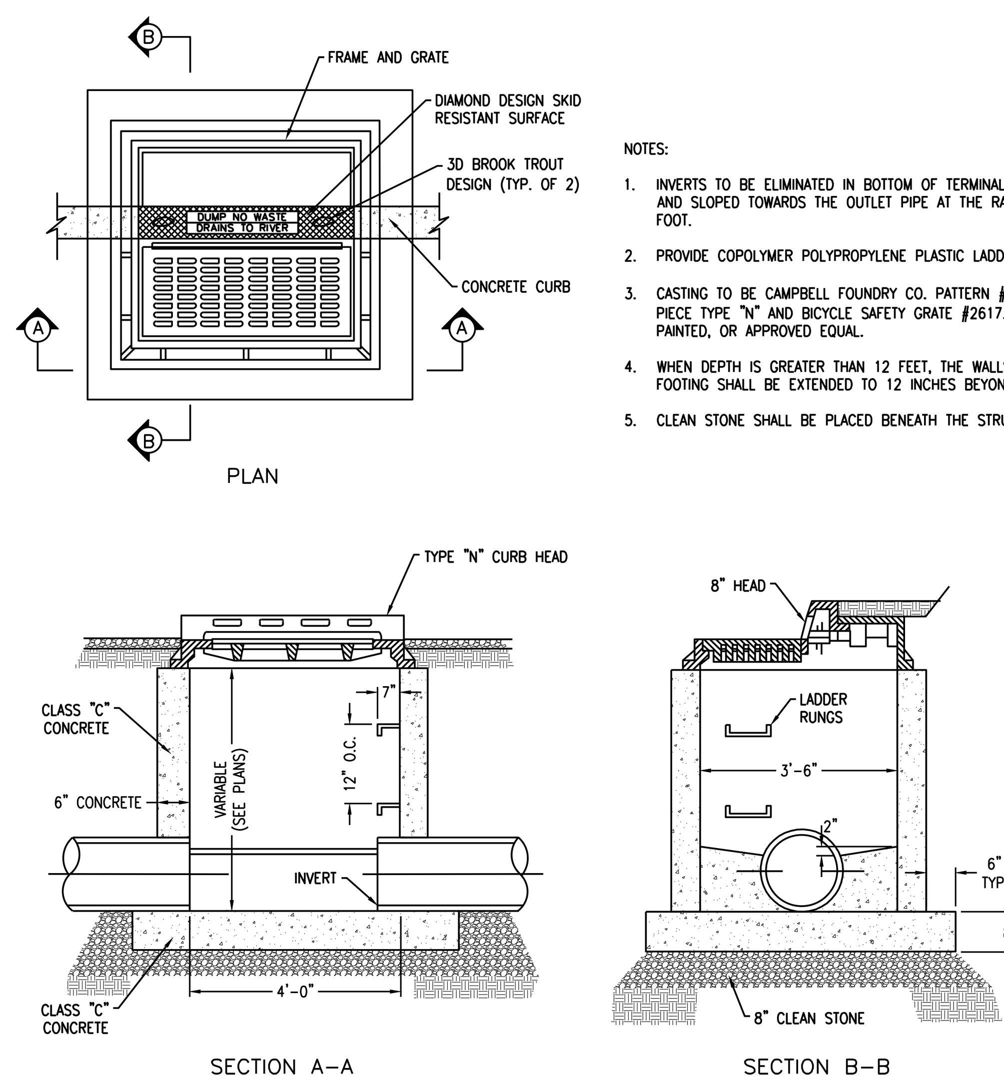


NOTES:

1. INVERTS TO BE ELIMINATED IN BOTTOM OF TERMINAL INLETS. BOTTOMS SHALL BE DISHED AND SLOPED TOWARDS THE OUTLET PIPE AT THE RATE OF A GRADE OF 2 INCHES PER FOOT.
2. PROVIDE COPOLYMER POLYPROPYLENE PLASTIC LADDER RUNGS @ 12 INCHES ON CENTER.
3. CASTING TO BE CAMPBELL FOUNDRY CO. PATTERN #2618 OR EQUIVALENT WITH ECO CURB PIECE TYPE "N" AND BICYCLE SAFETY GRATE #2617. CASTING TO BE THOROUGHLY PAINTED, OR APPROVED EQUAL.
4. WHEN DEPTH IS GREATER THAN 12 FEET, THE WALLS SHALL BE 8 INCHES THICK AND THE FOOTING SHALL BE EXTENDED TO 12 INCHES BEYOND THE OUTSIDE WALLS.
5. CLEAN STONE SHALL BE PLACED BENEATH THE STRUCTURE TO A DEPTH OF 8 INCHES.

**TYPE "B" INLET**

N.T.S.

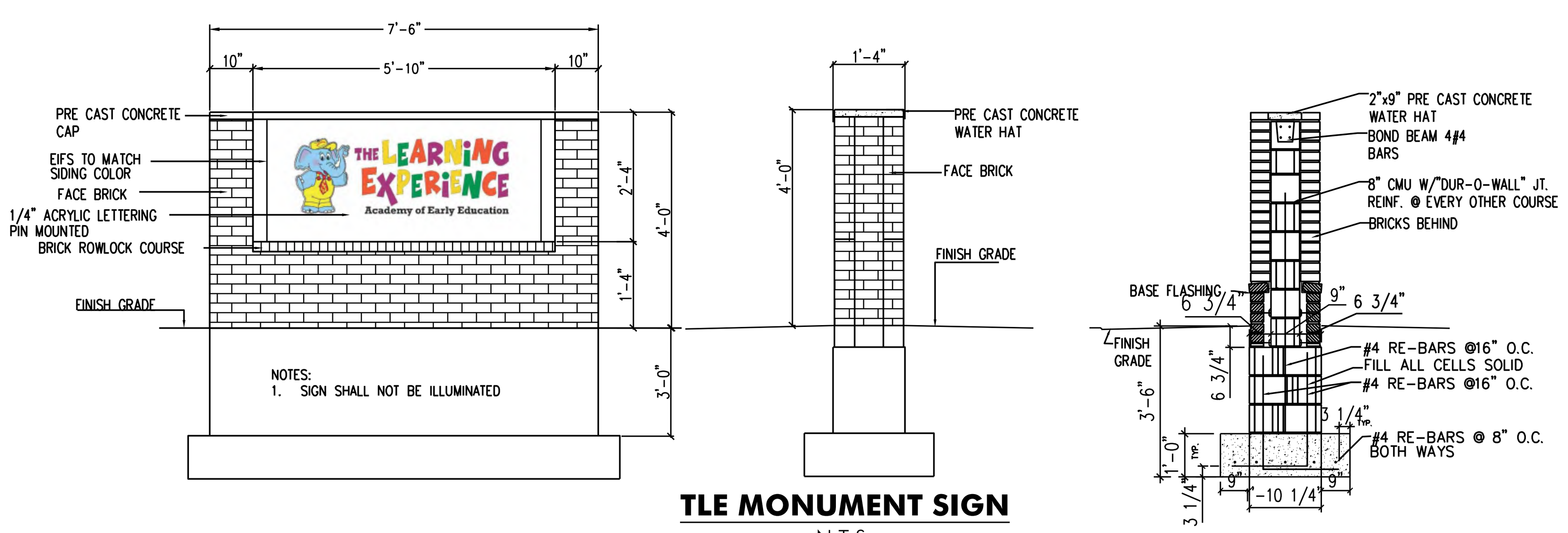


**TLE MONUMENT SIGN**

N.T.S.

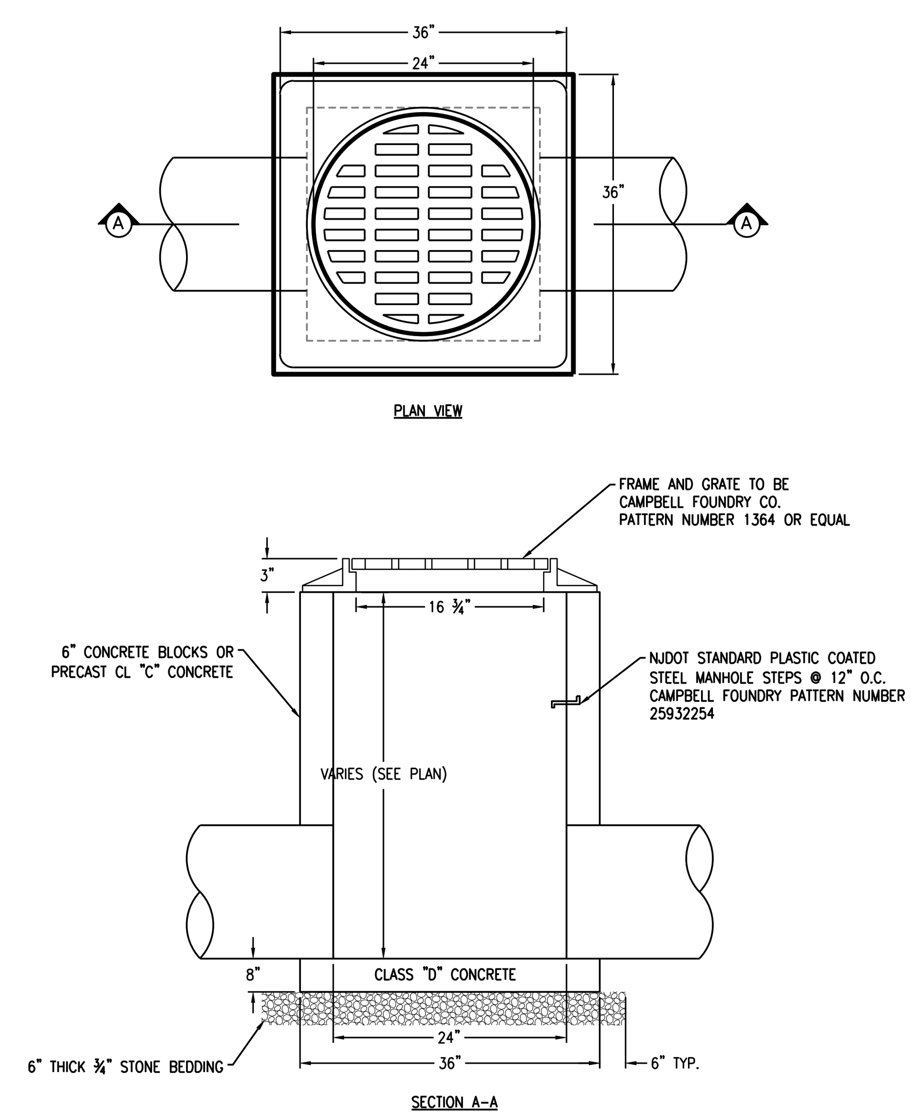


**FIELD INLET**

N.T.S.

Jarmel **Kizel**


ARCHITECTS AND ENGINEERS INC.
42 OKNER PARKWAY
LIVINGSTON, NEW JERSEY 07039
TEL: 973-994-9669
FAX: 973-994-4069
www.jarmelkizel.com


Architecture
Engineering
Interior Design
Implementation Services

ISSUE

| NO. | DATE | DESCRIPTION | INT. |
|---|---|---|---|
| 1. | 6.13.19 | COMPLETENESS REVIEW | GPG |
| 2. | 10.31.19 | PLANNING BOARD SUBMISSION | GPG |
| 3. | 12.02.19 | P.B. RE-SUBMISSION | GPG |
| 4. | 3.04.20 | P.B. RE-SUBMISSION | GPG |
| 5. | 9.04.20 | FOR 9.15.20 P.B. HEARING | GPG |

REVISION

| NO. | DATE | DESCRIPTION | INT. |
|---|---|---|---|
| 1. | 10.31.19 | PER NJDEP & TECH. REVIEW #1 | GPG |
| 2. | 12.02.19 | REVISED BUILDING LOCATION | APP |


**PRINCIPALS**

**MATTHEW B. JARMEL, AIA, MBA**
AZ LIC 48159 · CO LIC ARC-401483 · CT LIC ARI.0011415 · DC LIC ARC101849 · DE LIC S5-0007256 · FL LIC AR98965 · GA LIC RA011484 · IA LIC 05577 · IL LIC 001.020069 · MA LIC AR10286 · MD LIC 12662 · MI LIC 1301052189
NJ LIC AI0-12787 · MN LIC 46404 · NC LIC 10120 · NH LIC 3501 · NY LIC 024673 · OH LIC A-99-12444 · PA LIC RA-014851-B · RI LIC ARC.0004765 · SC LIC AR.9163 · TN LIC 103850 · TX LIC 20992 · VA LIC 0401 014089 · VT LIC 2453

**IRWIN H. KIZEL, AIA, PP**
CT LIC 08522 · NJ LIC 21AI00794700 · NJ PP LIC 33LI00243100

**RICHARD A. JARMEL, PE**
CT LIC PEN0027735 · FL LIC 83149 · MI LIC 6201052339 · DE LIC 18754 · VT LIC 88498
NJ LIC 37491 · MN LIC 47482 · NY LIC 073898-1 · PA LIC PE070600 · MA LIC 50445 · TX LIC 123822

**ASSOCIATES**

**RONALD A. BROKENSHIRE, PE** CT LIC PEN.0032811 · NJ LIC GE45511 · PA LIC PE085817
**DAVID L. LESESNE, RA** CT LIC ARI-0011748 · MA LIC 31425 · NJ LIC AI 13231 · NY LIC 024719 · PA LIC RA-405081
**MICHAEL J. VORLAND, RA** NY LIC 036993
**GERARD P. GESARIO, PE** NJ LIC GE038255
**FREDERICK KINCAID, RA** NJ LIC 21A1018294
**JEROME LESLIE EBEN, FAIA, PP** PA LIC 016502-B · VA LIC 0401 012073 · NJ LIC AI 8883 · NY LIC 019151 · IL LIC 001 017694
**CHERYL SCHWEIKER, AIA** NJ LIC 21AI02069000 · PA LIC RA407927

NJ State Board Of Architects Authorization No. 161
NJ State Board Of Engineers & Land Surveyors Authorization No. 24GA28053000


Project: **THE LEARNING EXPERIENCE**
**PRELIMINARY AND FINAL SITE PLAN**
**100 UNION AVENUE**
**BLOCK 78.01, LOT 1, TAX SHEET # 22**
**BOROUGH OF WATCHUNG**
**COUNTY OF SOMERSET, STATE OF NEW JERSEY**

| | |
|---|---|
| Project No: **TLENJ-S-18-295** | Scale: **AS NOTED** |
| Drawn By: **A.P.P.** | Approved By: **G.P.G.** |

Drawing Name: **DETAIL SHEET**

Drawing Number: **C-902**

Sheet No: **15** of: **17**

Initial Date: **MAY 30, 2019**

**GERARD P. GESARIO PROFESSIONAL ENGINEER N.J. LIC. #GE038255**

S:\PROJECTS\TLENJ-S-18-295 TLE WATCHUNG UNION AVENUE\CAD\18-295 C-901 DETAIL-3.DWG APROTOPAPAS PLOTTED: 09/02/2020

**LIBERTY PUMP SYSTEM**
N.T.S.

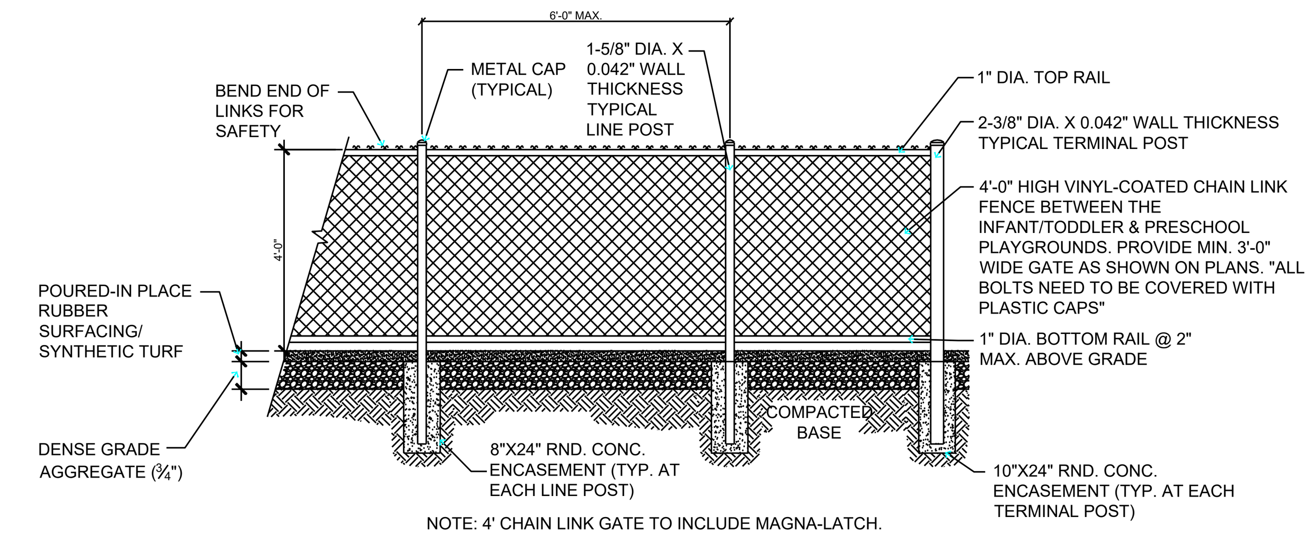


**4' CHAIN LINK FENCE DETAIL**
N.T.S.

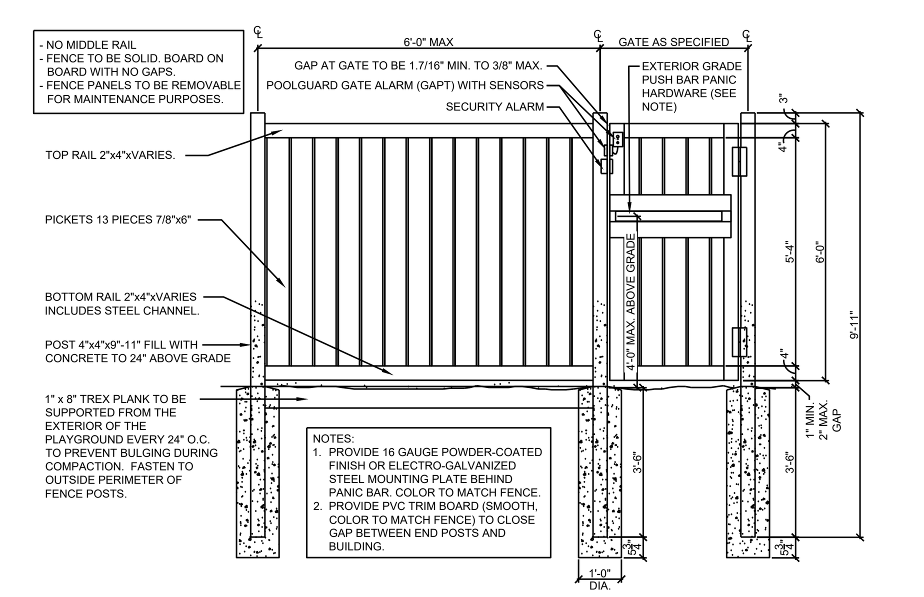

**VINYL FENCE & GATE WITH PANIC HARDWARE DETAIL**
N.T.S.

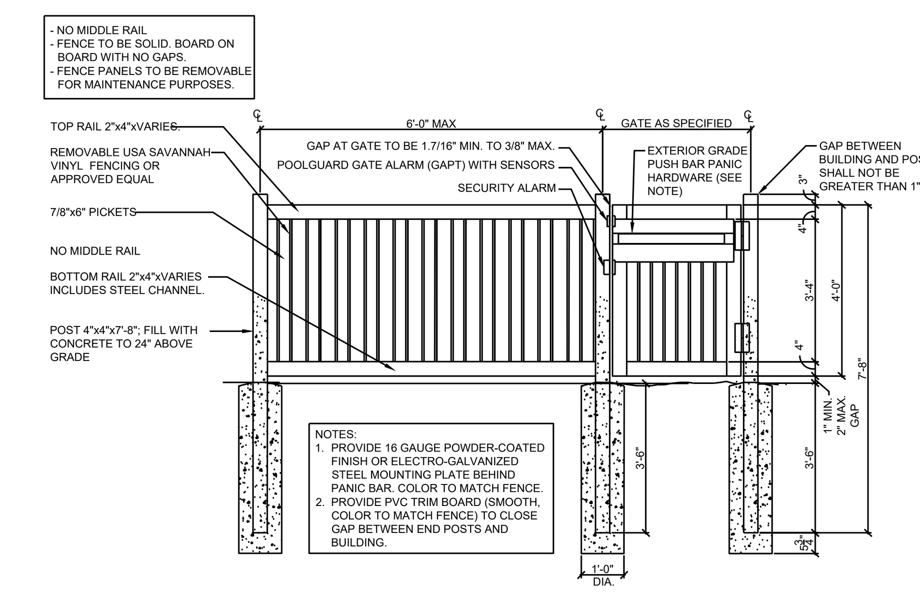

**4' VINYL FENCE & GATE DETAIL**
N.T.S.

INLET & MANHOLE NOTES

1. CORBELLING OF INLET WALLS WILL BE PERMITTED AT THE RATE OF 1/2" PER 8" OF HEIGHT OF WALL: MAXIMUM CORBEL 6" PER WALL.
2. WHEN THE ITEM MANHOLES, INLETS AND CATCH BASINS, ADDITIONAL DEPTH, IS SCHEDULED IN THE PROPOSAL AND THE DEPTH OF A STRUCTURE EXCEEDS 10' AS MEASURED FROM TOP OF COVER OR GRATE TO INVERT OF DRAINAGE STRUCTURE, THE WALLS OF THE STRUCTURE BELOW A DEPTH OF 8' SHALL BE 12" THICK, AND THE OVERALL HORIZONTAL DIMENSIONS OF FOUNDATIONS SHALL BE INCREASED 12", AND EXCEPT IN ROCK THE DEPTH INCREASED TO 12".
3. EXCEPT FOR CATCH BASINS AND TYPE A INLETS, FOOTINGS AND INVERTS SHALL BE CONSTRUCTED IN TWO STAGES, AND THE BOTTOM OF THE FOOTINGS SHALL BE 8" BELOW THE OUTER WALL OF THE LOWEST PIPE IN INLETS AND 10" IN MANHOLES.
4. THE ITEM OF RESET HEADS SHALL INCLUDE RAISING OR LOWERING THE HEAD CASTINGS OF INLETS AND CATCH BASINS, OR THE RAISING OF MANHOLE HEAD CASTINGS, FOR A MAXIMUM OF 12". ALL OTHER CHANGES IN POSITION OF HEAD CASTING SHALL BE CONSIDERED AS RECONSTRUCTED MANHOLES OR RECONSTRUCTED INLETS OR CATCH BASINS.
5. WHEN CURB PIECE HEIGHT SPECIFIED IS GREATER THAN CURB FACE HEIGHT, DEPRESS THE GUTTER OF GRATE SO THAT THE TOP OF CURB PIECE IS AT THE SAME ELEVATION AS THE TOP OF CURB. (SEE DETAIL)
6. LADDER RUNGS OF PRECAST INLETS SHALL BE SPACED A MAXIMUM OF 18".
7. INLET FOUNDATIONS WHICH ARE PRECAST SHALL BE PLACED ON A 6" THICK BED OF COMPACTED COARSE AGGREGATE SIZE No. 57. THE COARSE AGGREGATE SHALL EXTEND 6" BEYOND THE HORIZONTAL LIMITS OF THE INLET FOUNDATION. THE COST OF THE COARSE AGGREGATE BED SHALL BE INCLUDED IN THE UNIT PRICE BID FOR THE INLET AND MANHOLE ITEMS.
8. CASTINGS FOR PRECAST INLETS SHALL BE ADJUSTED TO GRADE WITH COURSES OF BRICK, AS REQUIRED, 12" MAXIMUM.
9. WHEN THE DEPTH OF A PRECAST INLET EXCEEDS 10' AS MEASURED FROM TOP OF GRATE TO INVERT, THE FOUNDATION SHALL BE INCREASED TO 12". WHEN ROCK IS ENCOUNTERED THE DEPTH OF THE FOUNDATION SHALL NOT BE INCREASED.
10. MINIMUM WALL REINFORCEMENT FOR PRECAST INLETS TYPE A, B, C, E, D-1 AND B MODIFIED.

| DEPTH BELOW TOP OF GRATE | HORIZONTAL REINFORCEMENT | VERTICAL REINFORCEMENT | WALL THICKNESS |
|---|---|---|---|
| 0' TO 10'-0" | #4 @ 10" C.C. | #4 @ 18" C.C. | 6" |
| 10'-1" TO 15'-0" | #4 @ 8" C.C. | #4 @ 18" C.C. | 6" |
| 15'-1" TO 20'-0" | #4 @ 6" C.C. | #4 @ 18" C.C. | 6" |

REINFORCING SHOWN FOR PRECAST INLETS IS THE MINIMUM REQUIRED. ADDITIONAL REINFORCEING FOR HANDLING IS THE RESPONSIBILITY OF THE CONTRACTOR.

11. CASTING OF PRECAST MANHOLES SHALL BE ADJUSTED TO GRADE WITH COURSES OF BRICK OR CONCRETE BLOCK, AS REQUIRED, 12" MAXIMUM.

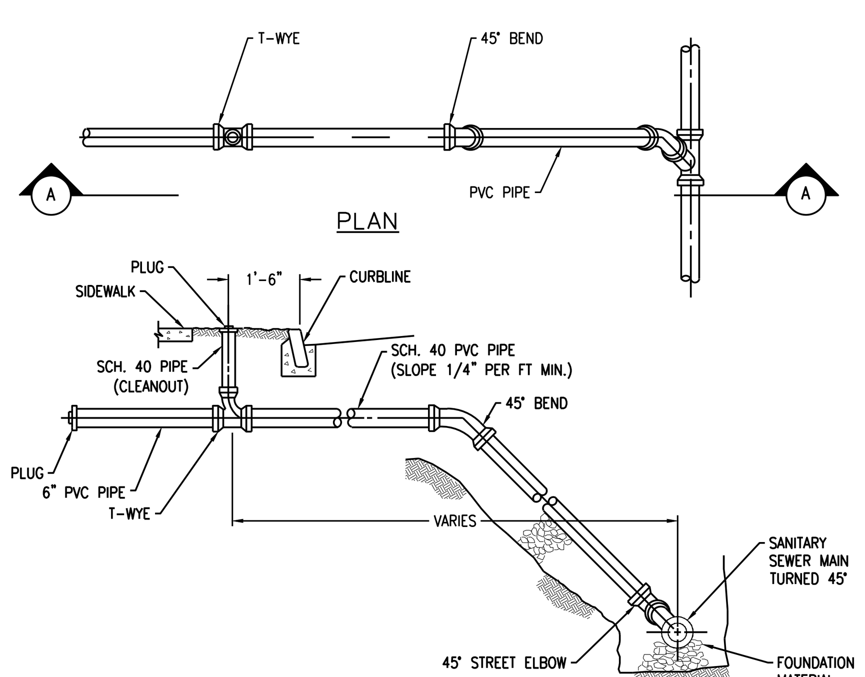


SECTION A–A

GENERAL NOTES:

1. ALL COUPLINGS, PLUGS, SOIL PIPES & CAPS TO BE STANDARD FOR TYPE OF PIPE USED, INSTALLATION TO BE WATERTIGHT.
2. HOUSE CONNECTIONS ARE TO BE 6" P.V.C.
3. ALL PLUG THREADS SHALL BE GREASED AT TIME OF INSTALLATION.
4. MINIMUM DEPTH OF COVER ON SANITARY SEWER MAINS SHALL BE 5 FEET.
5. POLYVINYL CHLORIDE PIPE AND FITTINGS FOR HOUSE LATERALS SHALL CONFORM TO A.S.T.M. D-3034.

**SANITARY SEWER BUILDING CONNECTION**
N.T.S.

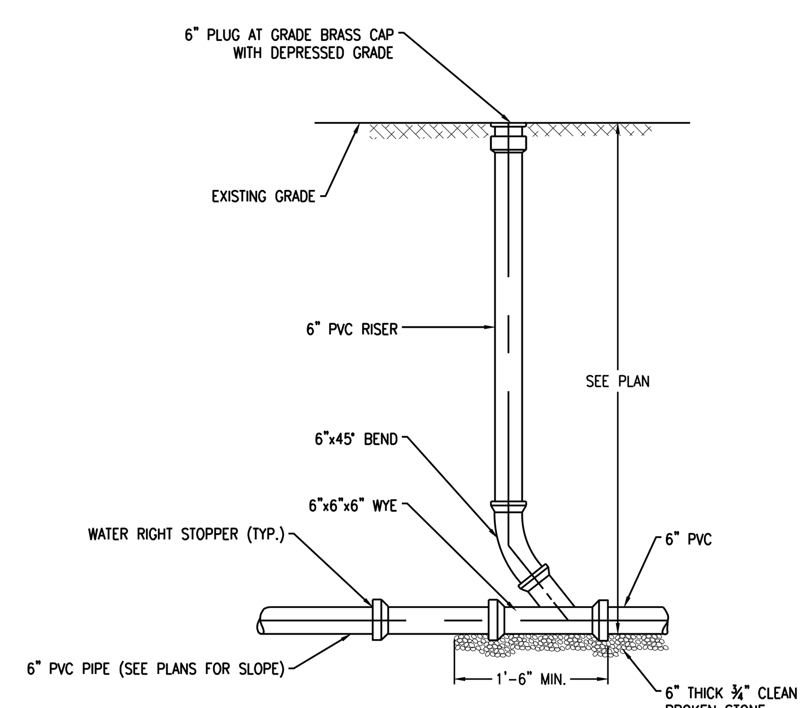


**SANITARY CLEANOUT**
N.T.S.

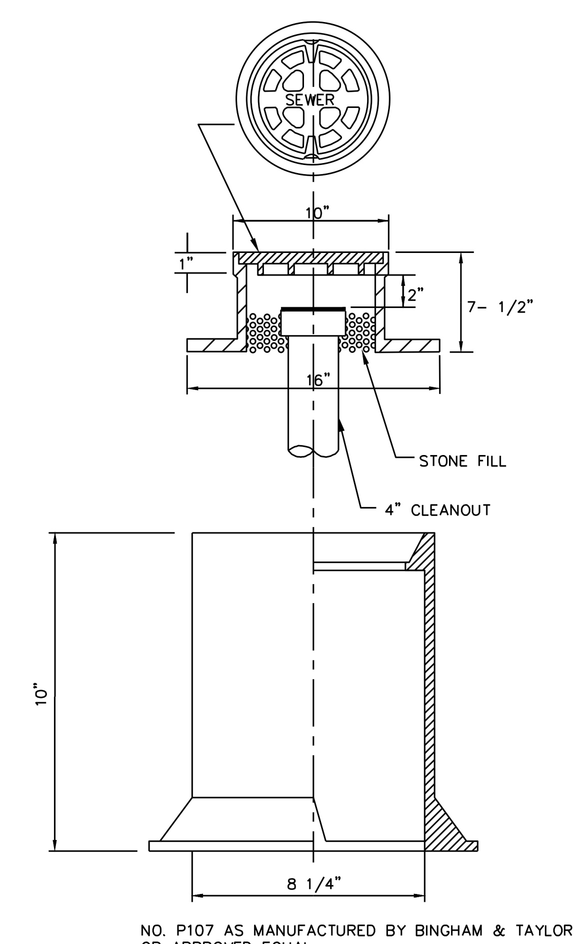


**CLEANOUT PAVEMENT BOX DETAIL**
N.T.S.

S:\PROJECTS\TLENJ-S-18-295 TLE WATCHUNG UNION AVENUE\CAD\18-295 C-901 DETAIL-4.DWG APROTOPAPAS PLOTTED: 09/02/2020


Jarmel Kizel
ARCHITECTS AND ENGINEERS INC.
42 OKNER PARKWAY
LIVINGSTON, NEW JERSEY 07039
TEL: 973-994-9669
FAX: 973-994-4069
www.jarmelkizel.com
Architecture
Engineering
Interior Design
Implementation Services


ISSUE

| NO. | DATE | DESCRIPTION | INT. |
|---|---|---|---|
| 1. | 6.13.19 | COMPLETENESS REVIEW | GPG |
| 2. | 10.31.19 | PLANNING BOARD SUBMISSION | GPG |
| 3. | 12.02.19 | P.B. RE-SUBMISSION | GPG |
| 4. | 3.04.20 | P.B. RE-SUBMISSION | GPG |
| 5. | 9.04.20 | FOR 9.15.20 P.B. HEARING | GPG |

REVISION

| NO. | DATE | DESCRIPTION | INT. |
|---|---|---|---|
| 1. | 10.31.19 | PER NJDEP & TECH. REVIEW #1 | GPG |
| 2. | 12.02.19 | REVISED BUILDING LOCATION | APP |


PRINCIPALS
MATTHEW B. JARMEL, AIA, MBA
IRWIN H. KIZEL, AIA, PP
RICHARD A. JARMEL, PE
ASSOCIATES
RONALD A. BROKENSHIRE, PE — CT LIC PEN.0032811 — NJ LIC GE45511 — PA LIC PE085817
DAVID L. LESESNE, RA — CT LIC ARI-0011748 — MA LIC 31425 — NJ LIC AI 13231 — NY LIC 024719 — PA LIC RA-405081
MICHAEL J. VORLAND, RA — NY LIC 036993
GERARD P. GESARIO, PE — NJ LIC GE038255
FREDERICK KINCAID, RA — NJ LIC 21A1018294
JEROME LESLIE EBEN, FAIA, PP — PA LIC 016502-B — VA LIC 0401 012073 — NJ LIC AI 8883 — NY LIC 019151 — IL LIC 001 017694
CHERYL SCHWEIKER, AIA — NJ LIC 21AI02069000 — PA LIC RA407927
NJ State Board Of Architects Authorization No. 161
NJ State Board Of Engineers & Land Surveyors Authorization No. 24GA28053000


Project: **THE LEARNING EXPERIENCE**
**PRELIMINARY AND FINAL SITE PLAN**
**100 UNION AVENUE**
**BLOCK 78.01, LOT 1, TAX SHEET # 22**
**BOROUGH OF WATCHUNG**
**COUNTY OF SOMERSET, STATE OF NEW JERSEY**

| | |
|---|---|
| Project No: **TLENJ-S-18-295** | Scale: **AS NOTED** |
| Drawn By: **A.P.P.** | Approved By: **G.P.G.** |
| Drawing Name: **DETAIL SHEET** | |
| Drawing Number: **C-903** | |
| Sheet No: **16** of: **17** | |
| Initial Date: **MAY 30, 2019** | **GERARD P. GESARIO PROFESSIONAL ENGINEER N.J. LIC. #GE038255** |

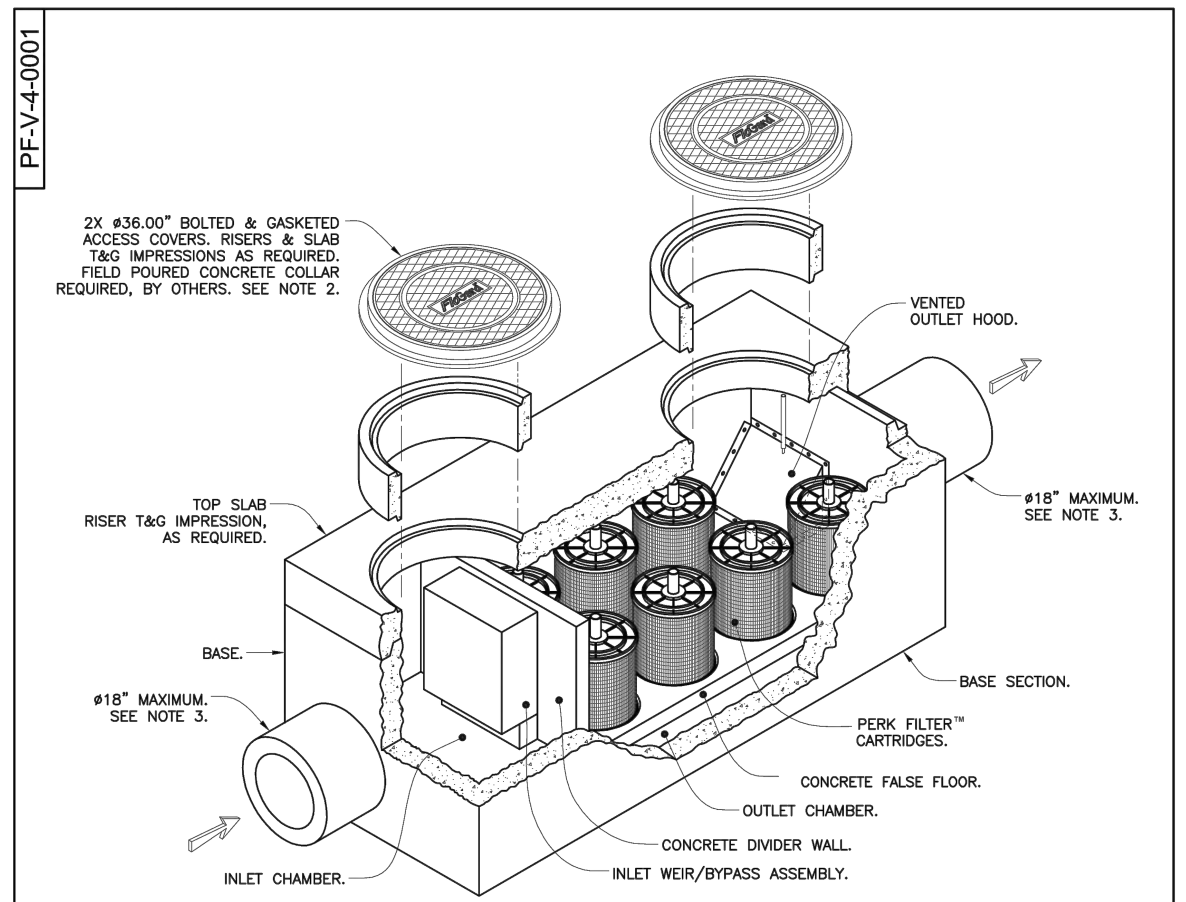


Notes:

1. Precast concrete structure shall be manufactured in accordance with ASTM Designation C857 and C858.
2. Filter system shall be supplied with traffic rated (H20) bolted & gasketed Ø36" circular access covers with risers as required. Shallow applications may require configurations with (H20) bolted & gasketed square/rectangular access hatches. Field poured concrete collars required,by others.
3. Inlet & outlet pipe(s) (Ø 18" maximum) may enter device on all three sides of the inlet & outlet chambers respectively.
4. Inlet chamber shall be supplied with a drain-down device designed to remove standing water between storm events.
5. For depths less than specified minimums contact Oldcastle® Stormwater Solutions for engineering assistance.

**Perk Filter™**
*4' Wide Concrete Vault*
*Three to Seven Cartridges / Stacks*
Media Filtration

**Oldcastle®** Stormwater Solutions
7921 Southpark Plaza, Suite 200 | Littleton, CO | 80120 | Ph: 800.579.8819 | oldcastlestormwater.com

THIS DOCUMENT IS THE PROPERTY OF OLDCASTLE PRECAST, INC. IT IS SUBMITTED FOR REFERENCE PURPOSES ONLY AND SHALL NOT BE USED IN ANY WAY INJURIOUS TO THE INTERESTS OF SAID COMPANY. COPYRIGHT © 2010 OLDCASTLE PRECAST, INC. ALL RIGHTS RESERVED.

| DRAWING NO. | REV | ECO | DATE | |
|---|---|---|---|---|
| PF-V-4-0001 | E | ECO–0122 JPR 10/3/14 | JPR 7/8/08 | SHEET 1 OF 2 |

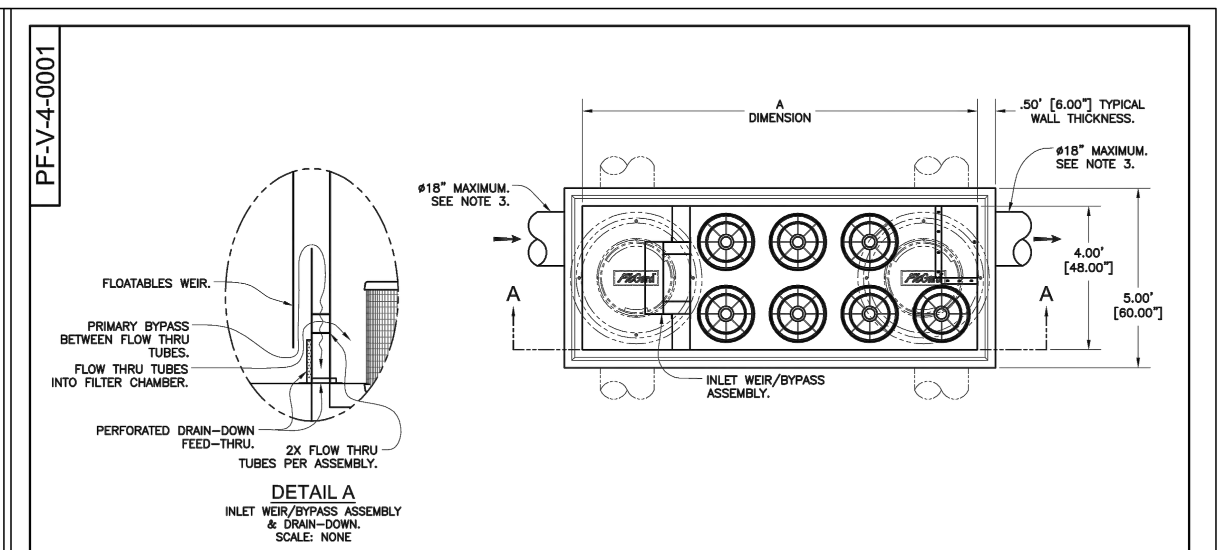


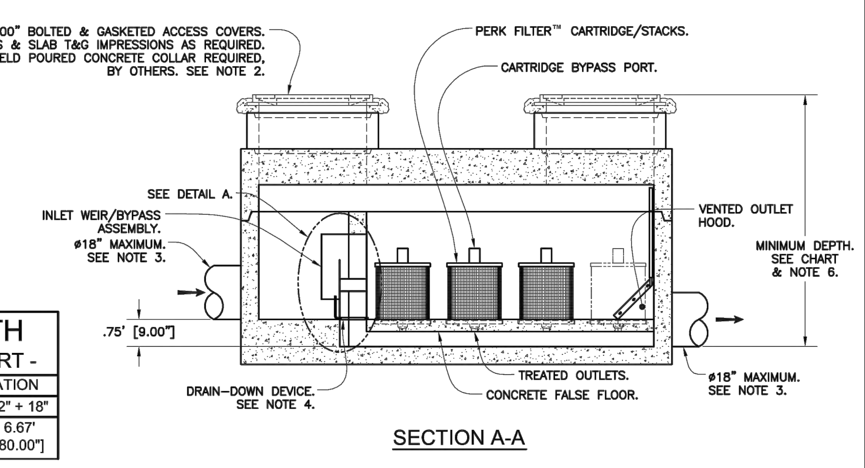


| MINIMUM DEPTH - RIM TO OUTLET INVERT - | | | |
|---|---|---|---|
| CARTRIDGE STACK CONFIGURATION | | | |
| 12" | 18" | 12" + 12" | 12" + 18" |
| 4.25' [51.00"] | 5.00' [60.00"] | 5.92' [71.00"] | 6.67' [80.00"] |

4' VAULT
TREATMENT FLOW RATES, TOTAL FLOW CAPACITIES & MAXIMUM HEAD LOSS

| CARTRIDGE STACK QUANTITY | A DIMENSION - LENGTH - (ID-FEET) | CARTRIDGE STACK CONFIGURATION 12" | | 18" | | 12" & 12" | | 12" & 18" | |
|---|---|---|---|---|---|---|---|---|---|
| | | TREATMENT FLOW RATE (GPM / CFS) | TOTAL FLOW CAPACITY (CFS) | TREATMENT FLOW RATE (GPM / CFS) | TOTAL FLOW CAPACITY (CFS) | TREATMENT FLOW RATE (GPM / CFS) | TOTAL FLOW CAPACITY (CFS) | TREATMENT FLOW RATE (GPM / CFS) | TOTAL FLOW CAPACITY (CFS) |
| 3 | 7 | 36 / 0.08 | 2.9 | 54 / 0.12 | 4.3 | 72 / 0.16 | 5.0 | 90 / 0.20 | 6.7 |
| 4 | 9 | 48 / 0.11 | 2.9 | 72 / 0.16 | 4.4 | 96 / 0.21 | 5.0 | 120 / 0.27 | 6.8 |
| 5 | 9 | 60 / 0.13 | 2.9 | 90 / 0.20 | 4.4 | 120 / 0.27 | 5.1 | 150 / 0.33 | 6.8 |
| 6 | 11 | 72 / 0.16 | 3.0 | 108 / 0.24 | 4.5 | 144 / 0.32 | 5.1 | 180 / 0.40 | 6.9 |
| 7 | 11 | 84 / 0.19 | 3.0 | 126 / 0.28 | 4.5 | 168 / 0.37 | 5.2 | 210 / 0.47 | 7.0 |
| | | | | | | | | | |
| MAXIMUM HEAD LOSS | | 1.7 FEET | | 2.3 FEET | | 2.9 FEET | | 3.5 FEET | |

**Perk Filter™**
*4' Wide Concrete Vault*
*Three to Seven Cartridges / Stacks*
Media Filtration

**Oldcastle®** Stormwater Solutions
7921 Southpark Plaza, Suite 200 | Littleton, CO | 80120 | Ph: 800.579.8819 | oldcastlestormwater.com

THIS DOCUMENT IS THE PROPERTY OF OLDCASTLE PRECAST, INC. IT IS SUBMITTED FOR REFERENCE PURPOSES ONLY AND SHALL NOT BE USED IN ANY WAY INJURIOUS TO THE INTERESTS OF SAID COMPANY. COPYRIGHT © 2010 OLDCASTLE PRECAST, INC. ALL RIGHTS RESERVED.

| DRAWING NO. | REV | ECO | DATE | |
|---|---|---|---|---|
| PF-V-4-0001 | E | ECO–0122 JPR 10/3/14 | JPR 7/8/08 | SHEET 2 OF 2 |

## PERK FILTER WATER QUALITY STRUCTURE

N.T.S.

NOTE:
STORMFILTER MAY BE SUBSTITUTED WITH NJDEP CERTIFIED APPROVED EQUAL.

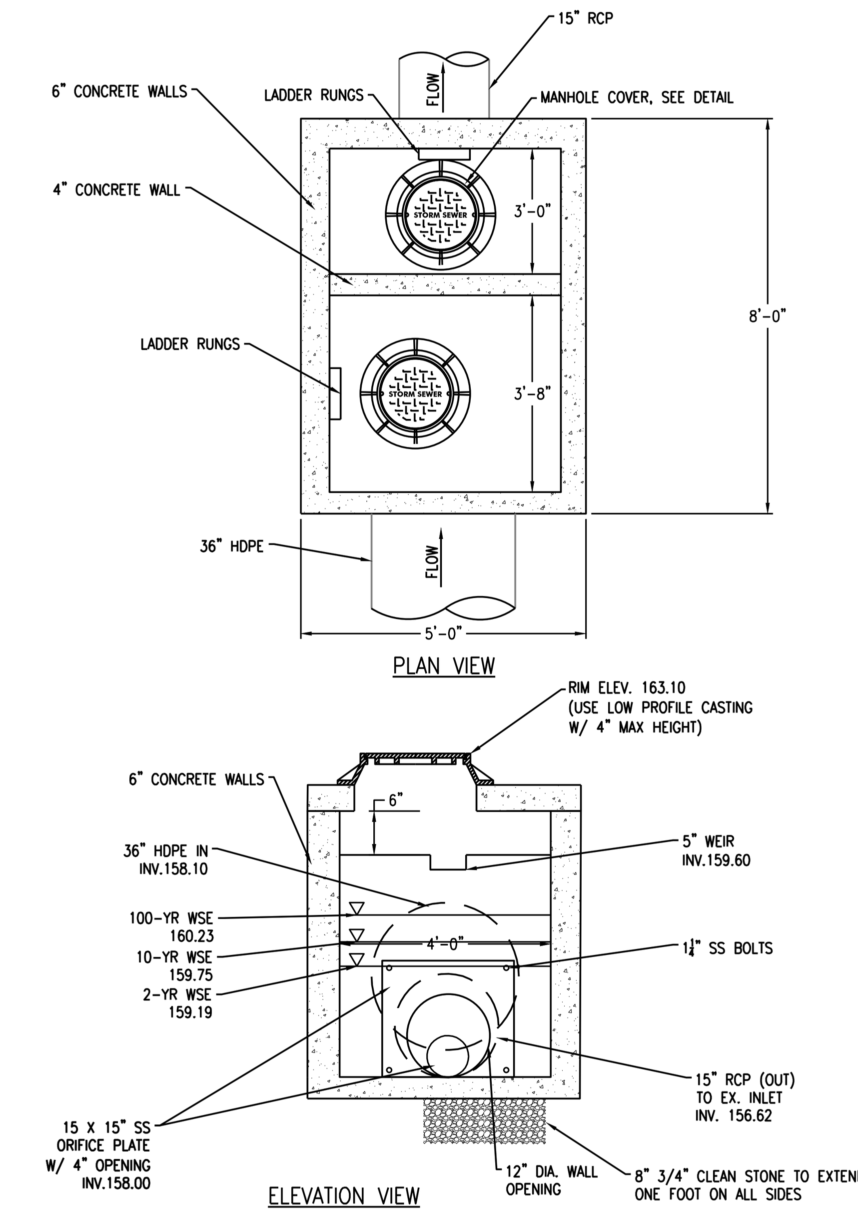


NOTES:

1. OUTLET CONTROL STRUCTURE SHALL BE MADE OF CONCRETE BLOCK WITH MORTAR PARGING, OR REINFORCED PRECAST CONCRETE. CONTRACTOR SHALL PROVIDE SUBMITTAL OF SAME PRIOR TO CONSTRUCTION.

## BELOW GRADE OUTLET CONTROL STRUCTURE

N.T.S.

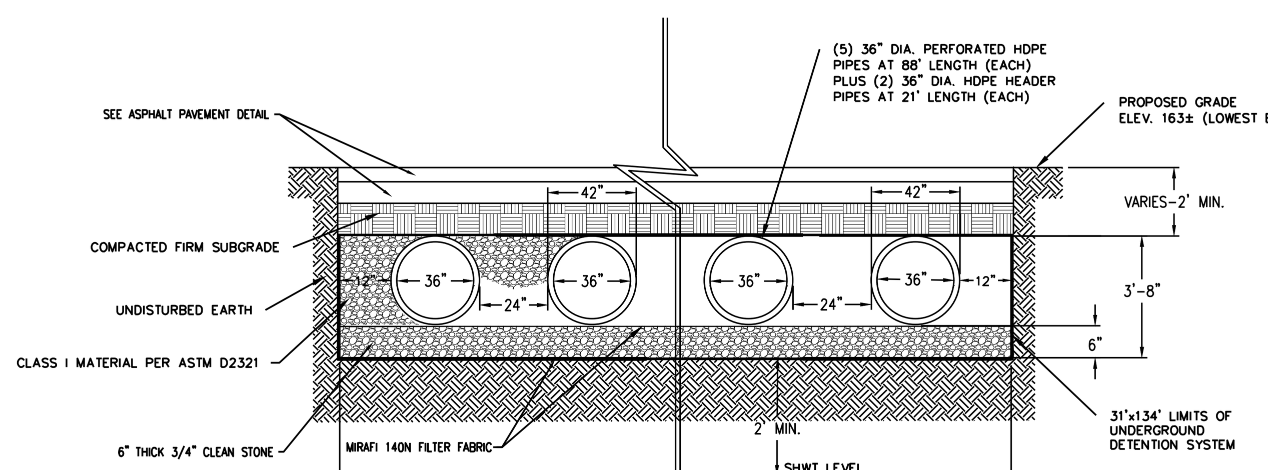


NOTES:

1. ALL MATERIALS AND METHODS OF CONSTRUCTION SHALL CONFORM TO THE REQUIREMENTS OF THE BOROUGH OF WATCHUNG.
2. ALL DETENTION AND RETENTION SYSTEMS SHALL BE INSTALLED IN ACCORDANCE WITH ASTM 2321, "STANDARD PRACTICE FOR UNDERGROUND INSTALLATION OF THERMOPLASTIC PIPE FOR SEWERS AND OTHER GRAVITY FLOW APPLICATIONS", LATEST ADDITION.
3. MEASURES SHOULD BE TAKEN TO PREVENT MIGRATION OF NATIVE FINES INTO BACKFILL MATERIAL, WHEN REQUIRED.

## UNDERGROUND INFILTRATION SYSTEM

N.T.S.

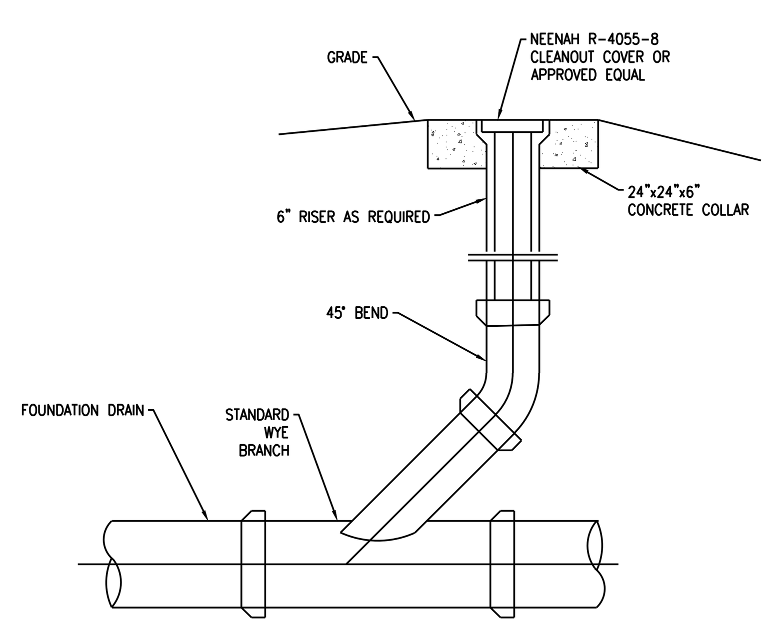


## STORM CLEANOUT

N.T.S.

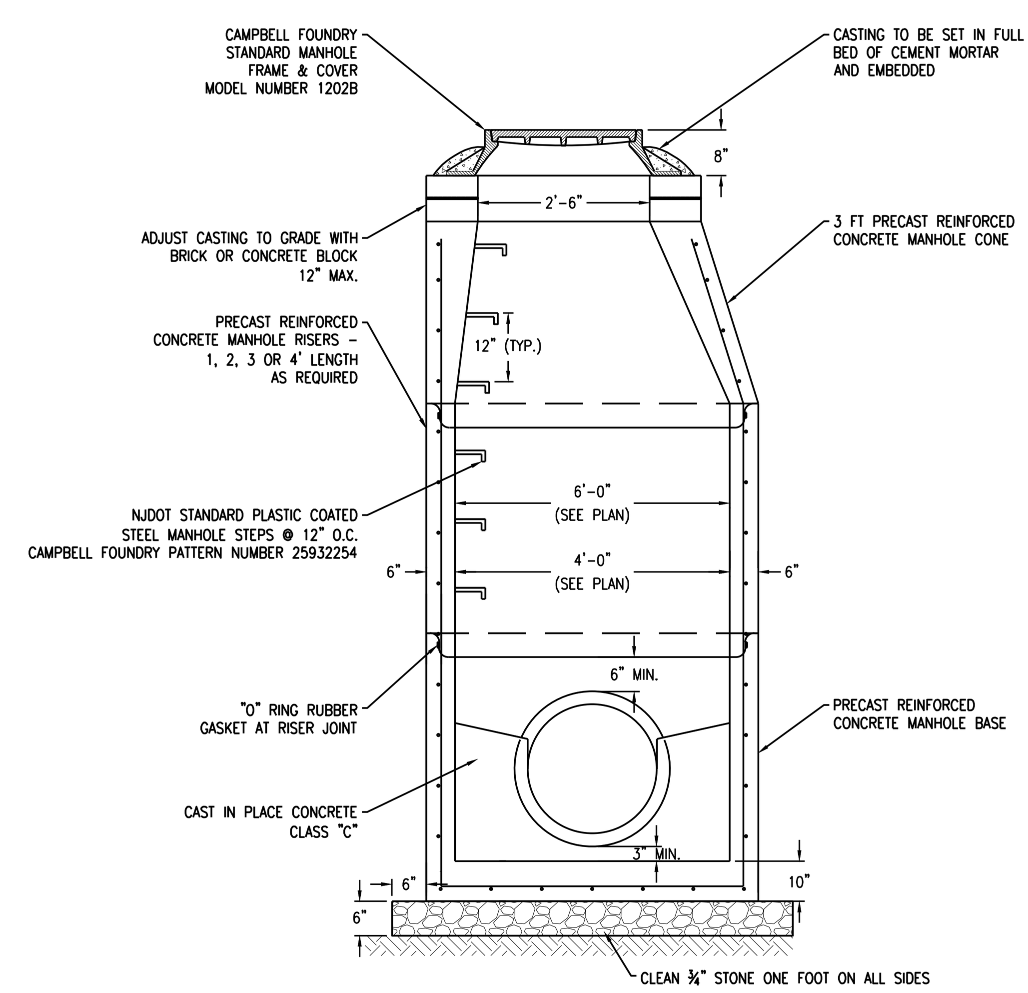


1. DIAMETER OF MANHOLE SHALL BE REVIEWED BY THE CONTRACTOR TO DETERMINE A LEGEND OF STANDARD MANHOLE DIMENSIONS WITH RESPECT TO PROPOSED PIPE SIZES, NUMBER AND GEOMETRY. OVER SIZE MANHOLES SHALL BE PROVIDED IF MINIMUM 6" WALL DIMENSION BETWEEN PIPES IS NOT MANUFACTURED.
2. MANHOLES SHALL BE STANDARD PRECAST CONCRETE UNITS AND SHALL BE DESIGNED AND CONSTRUCTED BY THE MANUFACTURER TO SUPPORT TRUCK H520 LOADING.

## STORM MANHOLE

N.T.S.

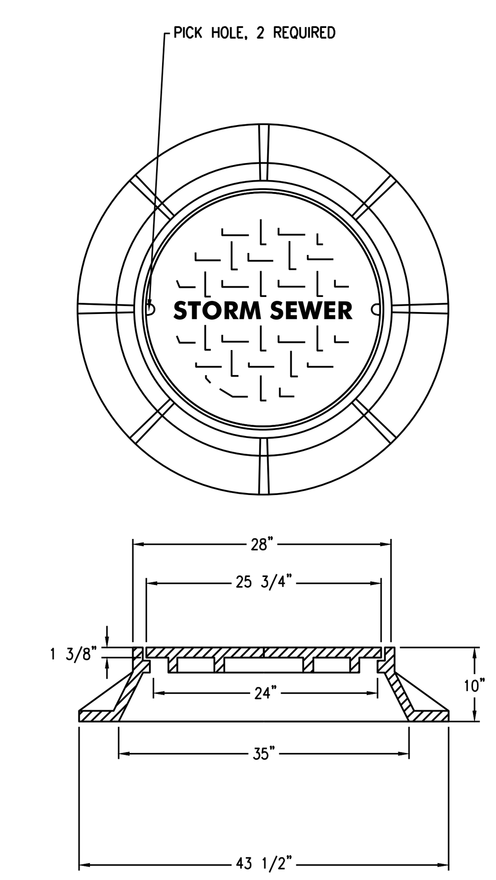


## MANHOLE FRAME AND COVER

N.T.S.


Jarmel **Kizel**
ARCHITECTS AND ENGINEERS INC.
42 OKNER PARKWAY
LIVINGSTON, NEW JERSEY 07039
TEL: 973-994-9669
FAX: 973-994-4069
www.jarmelkizel.com


Architecture
Engineering
Interior Design
Implementation Services

ISSUE

| NO. | DATE | DESCRIPTION | INT. |
|---|---|---|---|
| 1. | 6.13.19 | COMPLETENESS REVIEW | GPG |
| 2. | 10.31.19 | PLANNING BOARD SUBMISSION | GPG |
| 3. | 12.02.19 | P.B. RE-SUBMISSION | GPG |
| 4. | 3.04.20 | P.B. RE-SUBMISSION | GPG |
| 5. | 9.04.20 | FOR 9.15.20 P.B. HEARING | GPG |

REVISION

| NO. | DATE | DESCRIPTION | INT. |
|---|---|---|---|
| 1. | 10.31.19 | PER NJDEP & TECH. REVIEW #1 | GPG |
| 2. | 12.02.19 | REVISED BUILDING LOCATION | APP |


**PRINCIPALS**
**MATTHEW B. JARMEL, AIA, MBA** NJ LIC AI0-12787
AZ LIC 48159 MN LIC 46404
CO LIC ARC-401483 NC LIC 10120
CT LIC ARI.0011415 NH LIC 3501
DC LIC ARC101849 NY LIC 024673
DE LIC S5-0007256 OH LIC A-99-12444
FL LIC AR98965 PA LIC RA-014851-B
GA LIC RA011484 RI LIC ARC.0004765
IA LIC 05577 SC LIC AR.9163
IL LIC 001.020069 TN LIC 103850
MA LIC AR10286 TX LIC 20992
MD LIC 12662 VA LIC 0401 014089
MI LIC 1301052189 VT LIC 2453
**IRWIN H. KIZEL, AIA, PP** NJ LIC 21AI00794700
CT LIC 08522 NJ PP LIC 33LI00243100
**RICHARD A. JARMEL, PE** NJ LIC 37491
CT LIC PEN0027735 MN LIC 47482
FL LIC 83149 NY LIC 073898-1
MI LIC 6201052339 PA LIC PE070600
DE LIC 18754 MA LIC 50445
VT LIC 88498 TX LIC 123822
**ASSOCIATES**
**RONALD A. BROKENSHIRE, PE** NJ LIC GE45511
CT LIC PEN.0032811 PA LIC PE085817
**DAVID L. LESESNE, RA** NJ LIC AI 13231
CT LIC ARI-0011748 NY LIC 024719
MA LIC 31425 PA LIC RA-405081
**MICHAEL J. VORLAND, RA** NY LIC 036993
**GERARD P. GESARIO, PE** NJ LIC GE038255
**FREDERICK KINCAID, RA** NJ LIC 21A1018294
**JEROME LESLIE EBEN, FAIA, PP** NJ LIC AI 8883
PA LIC 016502-B NY LIC 019151
VA LIC 0401 012073 IL LIC 001 017694
**CHERYL SCHWEIKER, AIA** NJ LIC 21AI02069000
PA LIC RA407927
NJ State Board Of Architects Authorization No. 161
NJ State Board Of Engineers & Land Surveyors Authorization No. 24GA28053000


Project: **THE LEARNING EXPERIENCE**
**PRELIMINARY AND FINAL SITE PLAN**
**100 UNION AVENUE**
**BLOCK 78.01, LOT 1, TAX SHEET # 22**
**BOROUGH OF WATCHUNG**
**COUNTY OF SOMERSET, STATE OF NEW JERSEY**

| Project No: | Scale: |
|---|---|
| **TLENJ-S-18-295** | **AS NOTED** |
| Drawn By: **A.P.P.** | Approved By: **G.P.G.** |

Drawing Name:

**DETAIL SHEET**

Drawing Number: **C-904**

Sheet No: **17** of: **17**

Initial Date: **MAY 30, 2019**

**GERARD P. GESARIO**
**PROFESSIONAL ENGINEER**
**N.J. LIC. #GE038255**

S:\PROJECTS\TLENJ-S-18-295 TLE WATCHUNG UNION AVENUE\CAD\18-295 C-901 DETAIL-5.DWG APROTOPAPAS PLOTTED: 09/02/2020